GREE

[ CENTRAL AIR CONDITIONERS ]

R410A

# DC INVERTER MULTI VRF SERVICE MANUAL

## T1/R410A/50Hz (GC201112)

GREE ELECTRIC APPLIANCES INC.OF ZHUHAI

# CONTENTS

**PRODUCT** ..... **2**
1 MODELS LIST ..... 2
2 NOMENCLATURE ..... 2
3 FUNCTION ..... 3
4 PRODUCT DATA ..... 4
4.1 Product Data ..... 4
4.2 Operation Range ..... 6
5 PIPING DIAGRAM ..... 6
5.1 Heat Pump ..... 6
**CONTROL** ..... **8**
1 OPERATION FLOWCHART ..... 8
2 MAIN LOGIC ..... 11
2.1 Control Function of Outdoor Unit ..... 11
3 WIREDLESS REMOTE CONTROLLER ..... 15
3.1 Wiredless Remote Controller Y512 ..... 15
3.2 Wireless Remote Controller YB1FA (optional) ..... 16
4 WIRED REMOTE CONTROLLER ..... 17
4.1 Wired Controller Z60351F,Z60151F,Z63351F,Z63151F ..... 17
4.2 Wired Controller XK02 ..... 19
5 REGIONAL CONTROLLER ..... 23
5.1 Function ..... 23
5.2 Operation View ..... 24
5.3 Display View ..... 25
5.4 Connection Between Controller and Unit ..... 26
6 SMART ZONE CONTROLLER ..... 27
6.1 Function ..... 27
6.2 Operation View ..... 27
6.3 Display View ..... 28
6.4 Network Topological Diagram ..... 29
6.5 Installation and Debugging ..... 30
6.6 Attachment ..... 34
7 CENTRALIZED CONTROLLER ..... 35
7.1 Central Control ZJ7011 ..... 35
7.2 Centralized Controller CE51-24/E(M) ..... 38
8 MONITORING SOFTWARE ..... 48
8.1 Function ..... 48
8.2 Connection Between the Computer and the Unit ..... 48
8.3 Hardware ..... 50
9 DETECTION CONTROL BOARD ..... 55
9.1 Gate-control Function ..... 55

9.2 Working Process of Gate Control ..... 55
9.3 Detection Control Board Interface Sketch is shown in Fig.2: ..... 56
9.4 Products Parameters ..... 56
9.5 Installation of Detection Control Board ..... 56
**INSTALLATION ..... 59**
1 PRECAUTIONS FOR INSTALLATION ..... 59
1.1 Precautions for installation ..... 59
1.2 Key Points of Installation ..... 60
2 FLOW CHART OF INSTALLATION ..... 62
3 INSTALLATION OF OUTDOOR UNIT ..... 63
3.1 Cautions for installation of side discharge outdoor unit ..... 63
3.2 Selection of Installation Site ..... 63
3.3 Dimensions Data ..... 64
3.4 Installation space requirements ..... 64
4 INSTALLATION REQUIREMENTS OF REFRIGERANT PIPING ..... 65
4.1 Specification of refrigerant pipe ..... 65
4.2 Allowable Length and Height Differences of the Refrigerant Piping between the Indoor and Outdoor Units ..... 65
4.3 Size of Connection Pipe ..... 65
5 INSTALLATION OF REFRIGERANT PIPING ..... 66
5.1 Flow Chart of Installation ..... 66
5.2 Three Principles of Refrigerant Piping Installation ..... 67
5.3 Installation of Metal Embedded Pipe ..... 67
5.4 Installation of Carriage of Refrigerant pipin ..... 67
5.5 Management and Machining of Refrigerant Piping ..... 68
5.6 Installation of Refrigerant Piping ..... 72
5.7 Welding of Copper Pipe ..... 74
5.8 Cleaning of Refrigerant Piping ..... 78
5.9 Pressure Maintaining and Leak Hunting ..... 79
5.10 Heat Preservation of Refrigerant Piping ..... 80
5.11 Vacuum Pumping ..... 81
5.12 Refrigerant Charge ..... 82
6 INSTALLATION OF CONDENSATE PIPE ..... 83
6.1Material Quality Requirements for Condensate Pipe ..... 83
6.2 Key Points for Condensate Pipe Installation ..... 83
6.3 Test for Condensate Pipe ..... 87
6.4 Requirements of Heat preservation ..... 87
7 ELECTRICAL INSTALLATION ..... 88
7.1 Precautions for Electrical Installation ..... 88
7.2 Specifications of power cord & circuit breaker ..... 88
7.3 Wiring Sketch Map ..... 89
7.4 Dial-up ..... 89
**MAINTENANCE ..... 96**
1 List of Unit Errors ..... 96

1.1 List of Error Display on Wired Controller ..... 96
1.2 Display Code on Digital Tube of Outdoor Mainboard ..... 97
2 FLOW CHART OF TROUBLESHOOTING ..... 98
2.1 High-pressure Protection ..... 98
2.2 Low-pressure Protection ..... 99
2.3 Exhaust Temperature Protection ..... 100
2.4 Compressor overcurrent protection ..... 101
2.5 Communication error ..... 103
2.6 Water-full protection ..... 104
2.7 Error with room sensor, tube-inlet, tube middle and tube-exit sensor; error with room sensor, tube-inlet, tube middle and tube-exit sensor and exhaust / casing top sensor; error with the compressor bottom sensor ..... 104
2.8 No energization to the unit and mainboard ..... 105
2.9 PFC Protection ..... 106
2.10 IPM Protecion ..... 107
2.11 Trip ..... 108
2.12 Superheat Protection of Radiator ..... 109
2.13 DC Overvoltage Protection ..... 110
3 POWER DISTRIBUTION ..... 111
3.1 Diagram of Power Distribution ..... 111
3.2 Introduction of Major Electrical Elements ..... 111
3.3 Wiring diadram ..... 113
4 DISASSEMBLY AND ASSEMBLY PROCEDURE OF MAIN PARTS ..... 115
5 EXPLODED VIEWS AND PART LIST ..... 124

# PRODUCT

# PRODUCT

## 1 MODELS LIST

| Units Series | Model | Product Code | Capacity | | Power Supply | Appearance |
|---|---|---|---|---|---|---|
| | | | Cooling (Btu/h) | Heating (Btu/h) | | |
| DC Inverter Multi VRF | GMV-Pd100W/NaB-K | CN850W0072 | 34120 | 37532 | 220-240V~50Hz | |
| | GMV-Pd120W/NaB-K | CN850W0012 | 40944 | 47768 | 220-240V~50Hz | |
| | GMV-Pd140W/NaB-K | CN850W0022 | 47768 | 52545 | 220-240V~50Hz | |
| | GMV-Pd160W/NaB-K | CN850W0032 | 54592 | 60051 | 220-240V~50Hz | |
| | GMV-Pd140W/NaB-M | CN850W0150 | 47768 | 52545 | 380-415V 3N~,50Hz | |
| | GMV-Pd160W/NaB-M | CN850W0140 | 54592 | 60051 | 380-415V 3N~,50Hz | |

## 2 NOMENCLATURE

| GMV | □ | L | - | Pd | 120 | W | / | Na | B | - | K |
|---|---|---|---|---|---|---|---|---|---|---|---|
| 1 | 2 | 3 | | 4 | 5 | 6 | | 7 | 8 | | 9 |

| NO. | Description | Options |
|---|---|---|
| 1 | Code for type | GMV=Gree Multi Variable |
| 2 | Code for weather | Default:T1 T2:T2 weather T3:T3 weather |
| 3 | Code for model | L: Cooling Only<br>Default: Heat pump |
| 4 | Units Series | Pd: DC inverter VRF |
| 5 | Nominal cooling capacity | 120 represents 12kW<br>Btu/h=kW×3412 |
| 6 | | W: outdoor unit |
| 7 | Refrigerant | Na: R410A |
| 8 | Series number | B: The second generation |
| 9 | Power supply | K: 220-240V 50Hz<br>M:380-415V 3N~,50Hz |

## 3 FUNCTION

| | |
|---|---|
| For Comfortable Air Conditioning | Auto Restart |
| | Fan Operation Mode |
| | LCD Remote Controller (Option) |
| | Auto Swing Function |
| | Ceiling Soiling Prevention |
| | Program Dry |
| | High Fan Speed Mode |
| | High Ceiling Application |
| | Two Select Thermo Sensor |
| | Hot Start |
| | Timer Selector |
| For Easy Construction and Maintenance | Fresh Return air inlet Directly from The Unit |
| | Drain Pump |
| | Long Life Filter |
| | Ultra-Long life Filter (Option) |
| | Mold Resistant Treatment for Filter |
| | Filter Sign |
| | Mold Resistant Drain Pan |
| | Emergency Operation |
| | Self Diagnoses Function |
| For Flexible Control | Set Back Time Clock |
| | Double Remote Control |
| | Group Control By 1 Remote Controller |
| | Control By External Command |
| | Remote/Centralized Control |

# 4 PRODUCT DATA

## 4.1 Product Data

| Model | | | GMV-Pd100W/NaB-K | GMV-Pd120W/NaB-K | GMV-Pd140W/NaB-K | GMV-Pd160W/NaB-K |
|---|---|---|---|---|---|---|
| Product Code | | | CN850W0072 | CN850W0012 | CN850W0022 | CN850W0032 |
| Capacity | Cooling[a] | kW | 10 | 12 | 14 | 16 |
| | | kBtu/h | 34 | 41 | 48 | 55 |
| | Heating[b] | kW | 11 | 14 | 15.4 | 17.6 |
| | | kBtu/h | 38 | 48 | 53 | 60 |
| Sound Pressure Level | | dB(A) | 58 | 58 | 58 | 60 |
| Refrigerant | | | R410A | R410A | R410A | R410A |
| Refrigerant Filling Amount | | kg | 7.5 | 7.5 | 7.5 | 7.5 |
| Power Supply | | V/Hz/Ph | 220-240/50/1 | 220-240/50/1 | 220-240/50/1 | 220-240/50/1 |
| Power input | Cooling | kW | 2.86 | 3.5 | 4.36 | 4.98 |
| | Heating | kW | 2.6 | 3.4 | 4.05 | 4.85 |
| Current | Cooling | A | 14.20 | 17.30 | 20.50 | 23.20 |
| | Heating | A | 13.20 | 16.40 | 19.60 | 21.90 |
| Circuit breaker | | A | 40 | 40 | 40 | 40 |
| Recommended Power Lines | | $mm^2$×N | 4×3 | 4×3 | 6×3 | 6×3 |
| Compressor type | | | DC inverter dual-rotor type | DC inverter dual-rotor type | DC inverter dual-rotor type | DC inverter dual-rotor type |
| Moisture protection | | | IP24 | IP24 | IP24 | IP24 |
| Climate Type | | | T1 | T1 | T1 | T1 |
| Connection Pipes | High pressure Gas Pipe | mm | / | / | / | / |
| | High pressure Gas Pipe | Inch | / | / | / | / |
| | Low pressure Gas Pipe | mm | / | / | / | / |
| | Low pressure Gas Pipe | Inch | / | / | / | / |
| | Liquid Pipe | mm | Φ9.52 | Φ9.52 | Φ9.52 | Φ9.52 |
| | | Inch | 3/8 | 3/8 | 3/8 | 3/8 |
| | Connection Method | | Flare Connection | Flare Connection | Flare Connection | Flare Connection |
| Dimensions of Unit | Width | mm | 950 | 950 | 950 | 950 |
| | Depth | mm | 340 | 340 | 340 | 340 |
| | Height | mm | 1250 | 1250 | 1250 | 1250 |
| Dimensions of Package | Width | mm | 1110 | 1110 | 1110 | 1110 |
| | Depth | mm | 450 | 450 | 450 | 450 |
| | Height | mm | 1280 | 1280 | 1280 | 1280 |
| Net Weight | | kg | 111 | 111 | 111 | 115 |
| Gross Weight | | kg | 122 | 122 | 122 | 122 |
| Loading Quantity ( 20' Container ) [a] | | unit | 26 | 26 | 26 | 26 |
| Loading Quantity ( 40' Container )[b] | | unit | 54 | 54 | 54 | 54 |
| Loading Quantity ( 40' High Cube Container )[c] | | unit | 54 | 54 | 54 | 54 |

| Model | | | GMV-Pd140W/NaB-M | GMV-Pd160W/NaB-M |
|---|---|---|---|---|
| Product Code | | | CN850W0150 | CN850W0140 |
| Capacity | Cooling[a] | kW | 14 | 16 |
| | | kBtu/h | 48 | 55 |
| | Heating[b] | kW | 15.4 | 17.6 |
| | | kBtu/h | 53 | 60 |
| Sound Pressure Level | | dB(A) | 58 | 60 |
| Refrigerant | | | R410A | R410A |
| Refrigerant Filling Amount | | kg | 7.0 | 7.0 |
| Power Supply | | V/Hz/Ph | 380-415/50/3 | 380-415/50/3 |
| Power input | Cooling | kW | 4.5 | 5.1 |
| | Heating | kW | 4.3 | 4.8 |
| Current | Cooling | A | 8.0 | 9.1 |
| | Heating | A | 7.7 | 8.6 |
| Circuit breaker | | A | 20 | 20 |
| Recommended Power Lines | | $mm^2$×N | 1.5×5 | 1.5×5 |
| Compressor type | | | DC inverter dual-rotor type | DC inverter dual-rotor type |
| Moisture protection | | | IP24 | IP24 |
| Climate Type | | | T1 | T1 |
| Connection Pipes | Gas Pipe | mm | Φ15.9 | Φ19.5 |
| | | Inch | 5/8 | 3/4 |
| | Liquid Pipe | mm | Φ9.52 | Φ9.52 |
| | | Inch | 3/8 | 3/8 |
| | Connection Method | | Flare Connection | Flare Connection |
| Dimensions of Unit | Width | mm | 950 | 950 |
| | Depth | mm | 340 | 340 |
| | Height | mm | 1250 | 1250 |
| Dimensions of Package | Width | mm | 1110 | 1110 |
| | Depth | mm | 450 | 450 |
| | Height | mm | 1280 | 1280 |
| Net Weight | | kg | 115 | 115 |
| Gross Weight | | kg | 122 | 122 |
| Loading Quantity ( 20' Container ) [a] | | unit | 26 | 26 |
| Loading Quantity ( 40' Container )[b] | | unit | 54 | 54 |
| Loading Quantity ( 40' High Cube Container )[c] | | unit | 54 | 54 |

**Notes:**

①. Refer to the product nameplate for parameters and specification of the unit;

②. The model with GMV code is heat pump unit;

③. The sound level was tested under circumstance of semi-anechoic chamber; the value of noise could be a little higher in actual operation.

### 4.2 Operation Range

| Model | Range of outdoor temperature℃(℉) |
|---|---|
| Cooling | 10℃(50℉)~48℃(118.4℉) |
| Heating | -20℃(-4℉)~27℃(8℉) |

## 5 PIPING DIAGRAM

### 5.1 Heat Pump

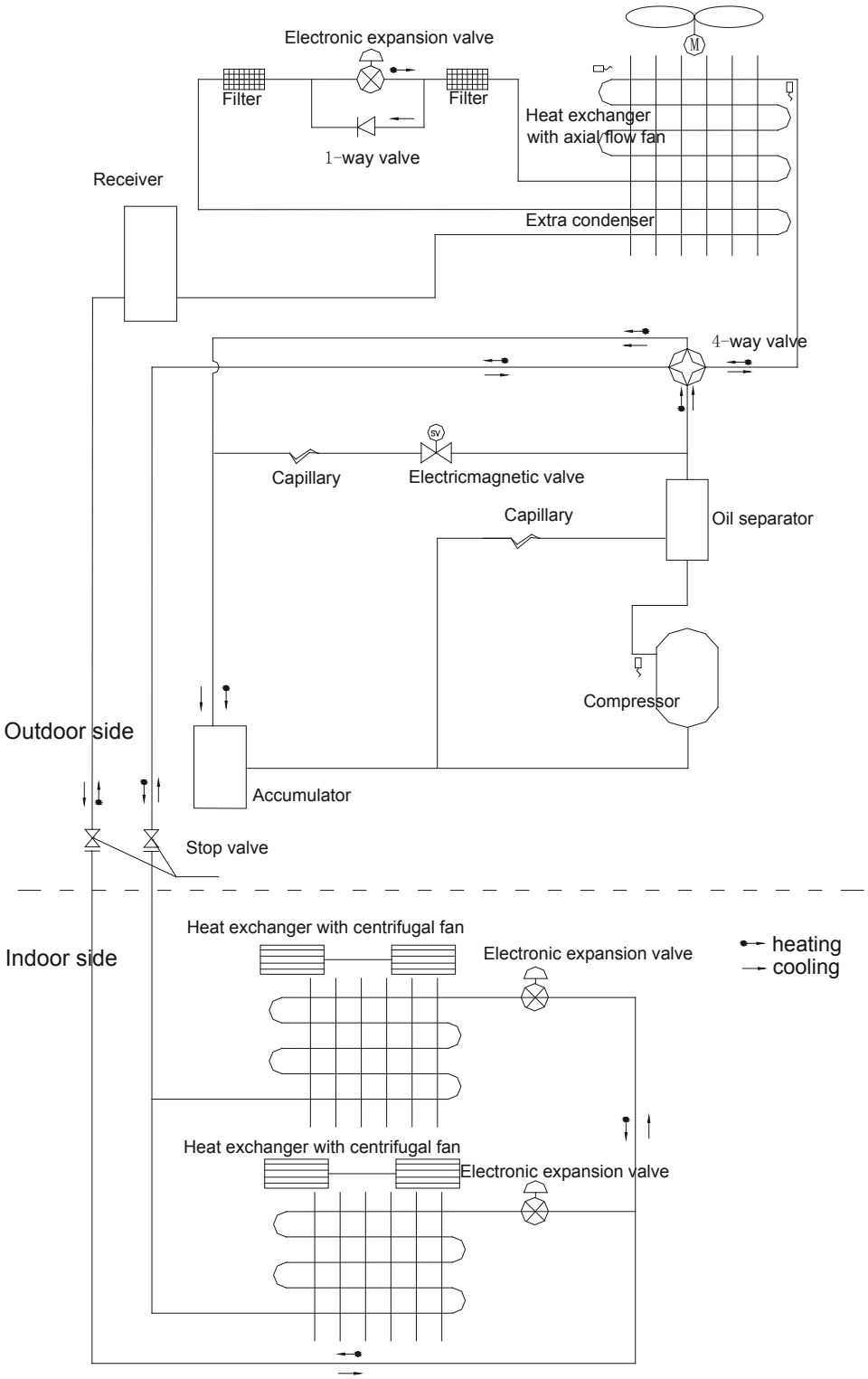

# CONTROL

# CONTROL

## 1 OPERATION FLOWCHART

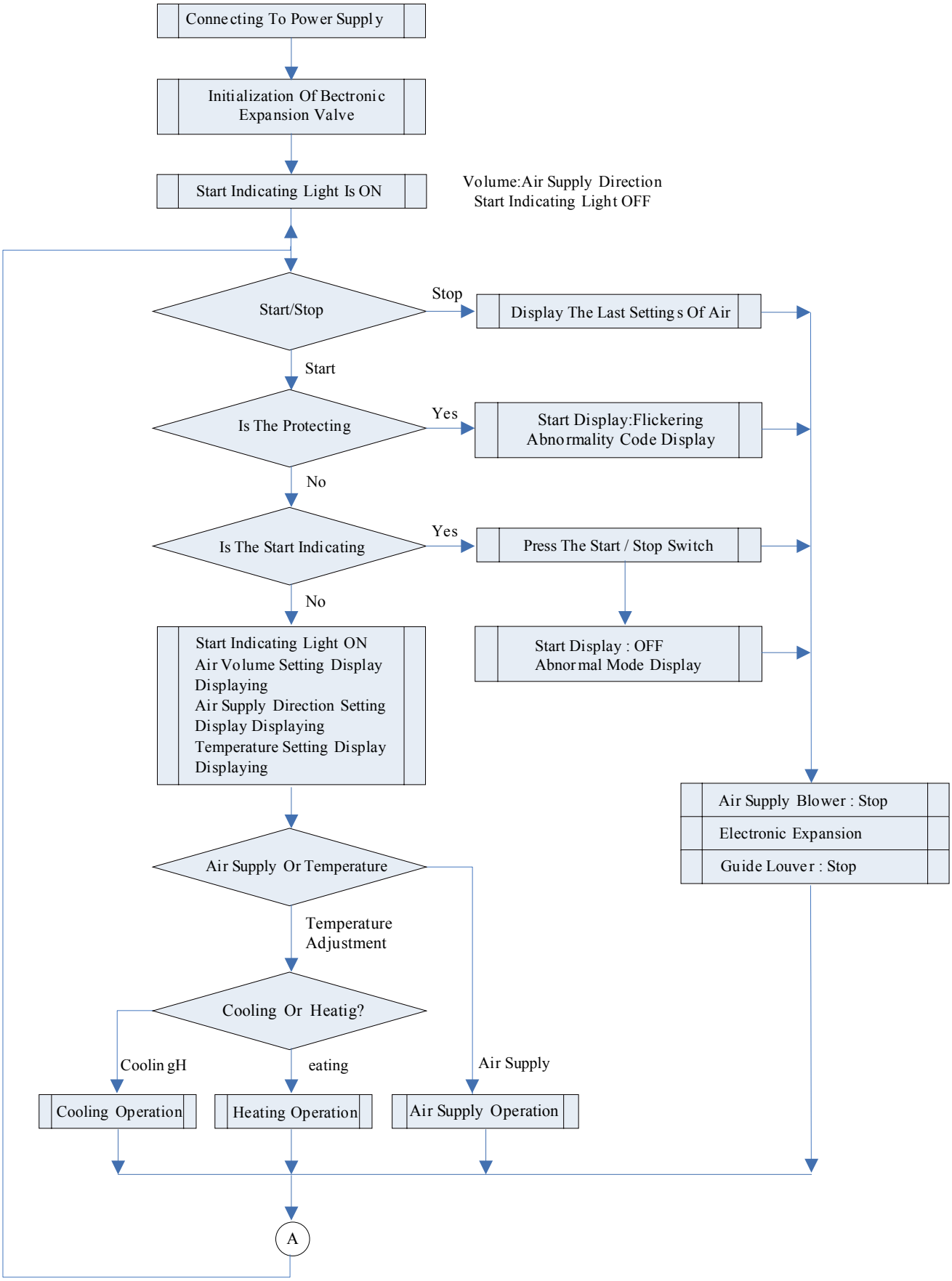

◆ Cooling Operation

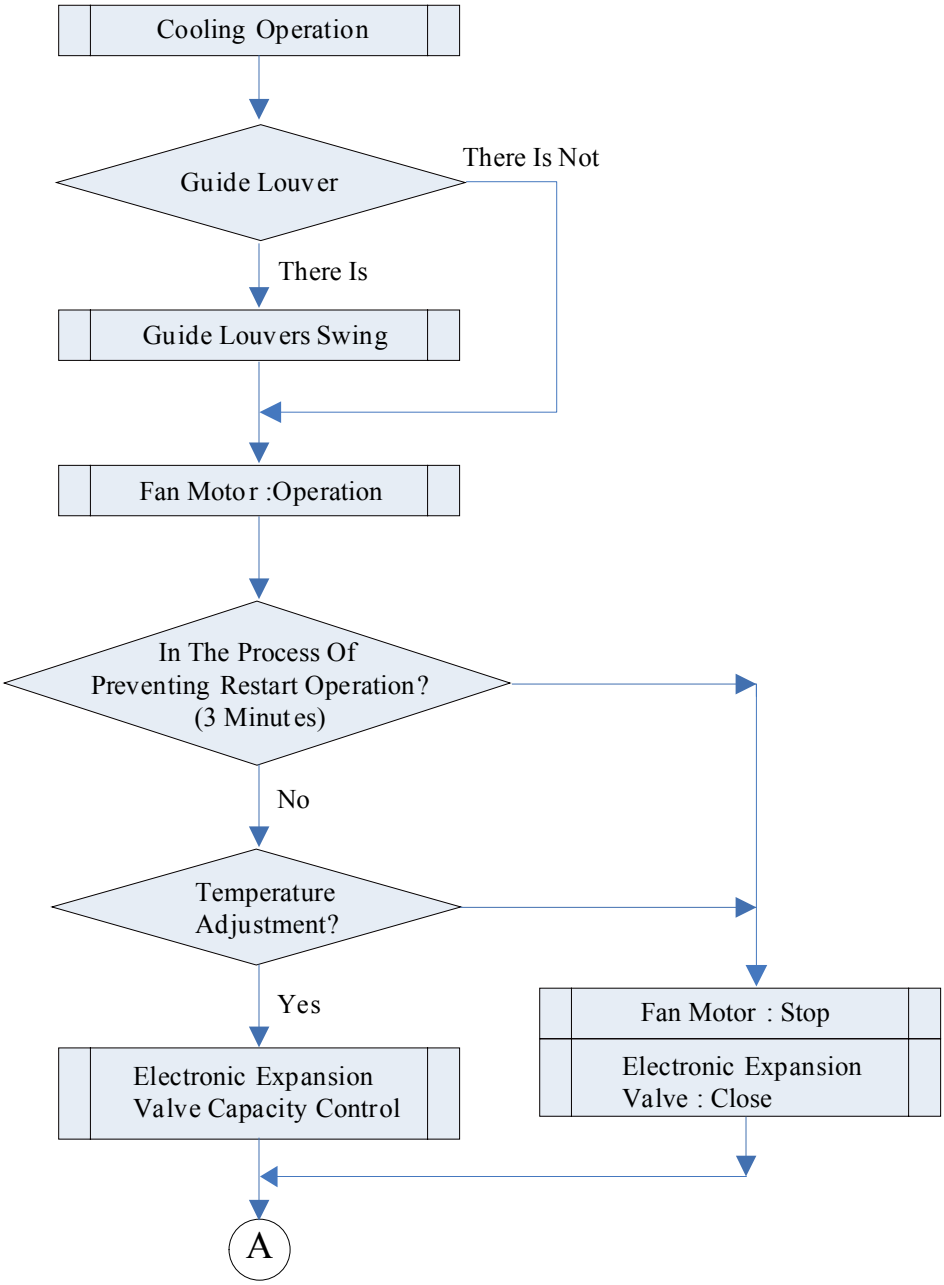

◆ Heating Operation

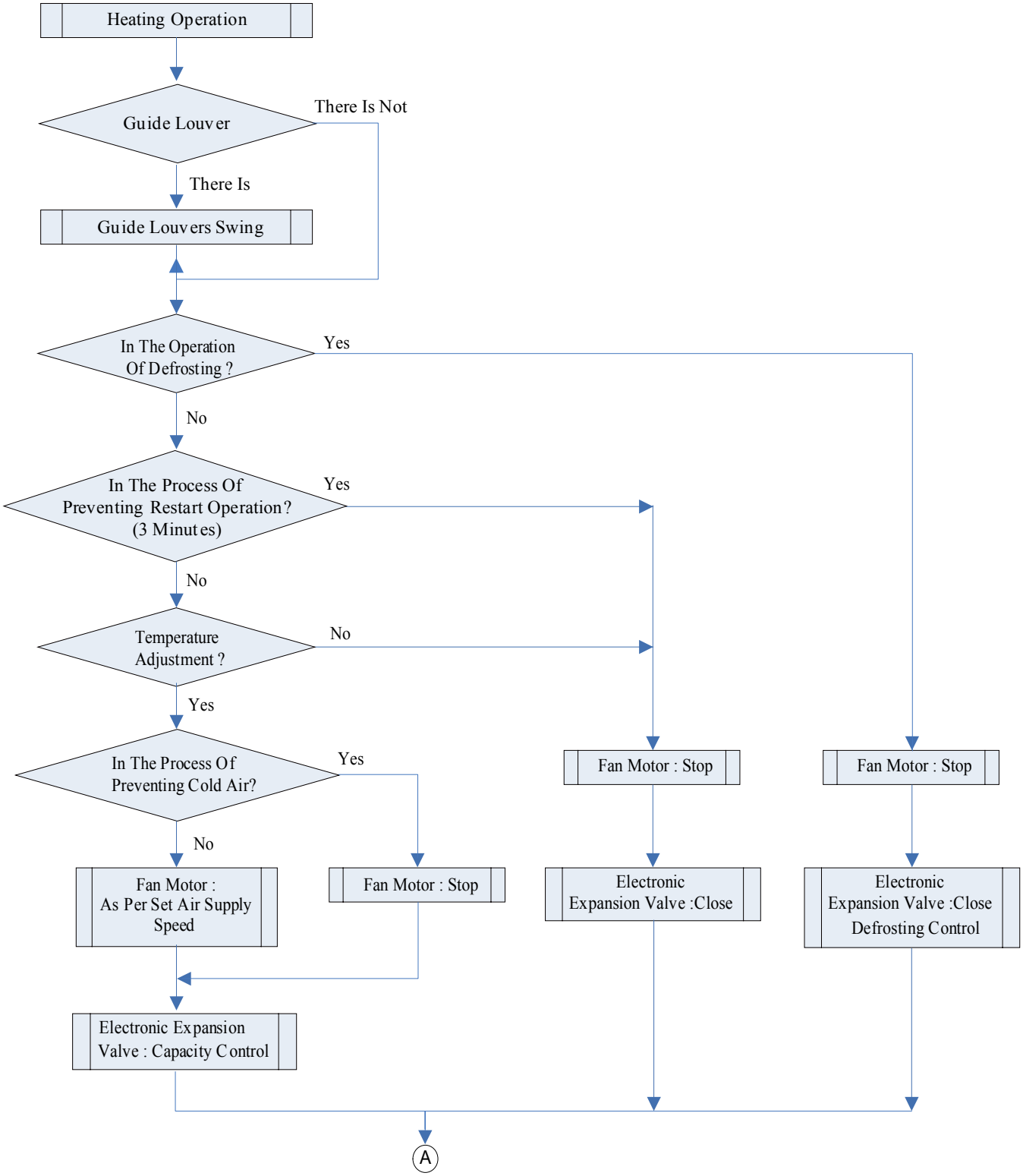

# 2 MAIN LOGIC

## 2.1 Control Function of Outdoor Unit

1) Compressor Capacity Output

It is defined that the full load capacity output of the compressor is 100%.

The compressor capacity output is calculated according to the required indoor load, which is related to the following factors: whether the indoor unit is started, the set temperature, the indoor ambient temperature, the outdoor ambient temperature, etc.

Calculation of capacity output of cooling compressor

$$Q = \frac{\sum_{i=1}^{j}(q_{iON} A_i)}{\sum_{i=1}^{j} q_i} \times 100\%$$

Calculation of capacity output of heating compressor

$$Q = \frac{\sum_{i=1}^{j}(q_{iON} A_i + q_{iOFF} \times B_i)}{\sum_{i=1}^{j} q_i} \times 100\%$$

For inverter compressor

$f = F_{\max} \times Q$ ,and when $f$ is not 0, the minimum is $F_{\min}$ , the maximum is $F_{\max}$

Among which:

$Q$ is the calculated compressor capacity output;

$f$ Actual run frequency of inverter compressor;

$F_{\max}$ Maximum allowable run frequency of inverter compressor;

$F_{\min}$ Minimum allowable run frequency of inverter compressor

$q_i$ Rated capacity of indoor unit

$q_{iON}$ Rated capacity of indoor unit in ON state

$A_i$ Rated capacity of indoor unit in OFF state

$A_i$ Setting temperature, correction of indoor and outdoor ambient temperature, %

$B_i$ Capacity compensation under heating when indoor unit in OFF state, %;

2) Compressor Start Control

◆ The shortest operating time of the compressor is 6 minutes. But when the switching-off signal or the protection signal is received, the compressor must stop even if the operation of it has not lasted for 6 minutes.

◆ The shortest stoppage period of the compressor is 3 minutes. The compressor must not be started at any time within 3 minutes after the compressor is stopped.

◆ If the capacity demand of each indoor unit is 0 when the whole unit group is under heating state, the compressor must be stopped (if under the heating operation alone the temperature of stop control is reached, the compressor must be stopped).

◆ Initial Sequence Chart of Cooling/Dry Modes:

During the first starting and frequency-rising process of compressor, the first dwell time is respective 3min, 5min and 5min when the frequency passed 60Hz, 75Hz and 90Hz. If high-pressure frequency-reducing and exhausting frequency-reducing happens during the process, you should quit the initial action, and deal with according to their separate frequency-reducing.

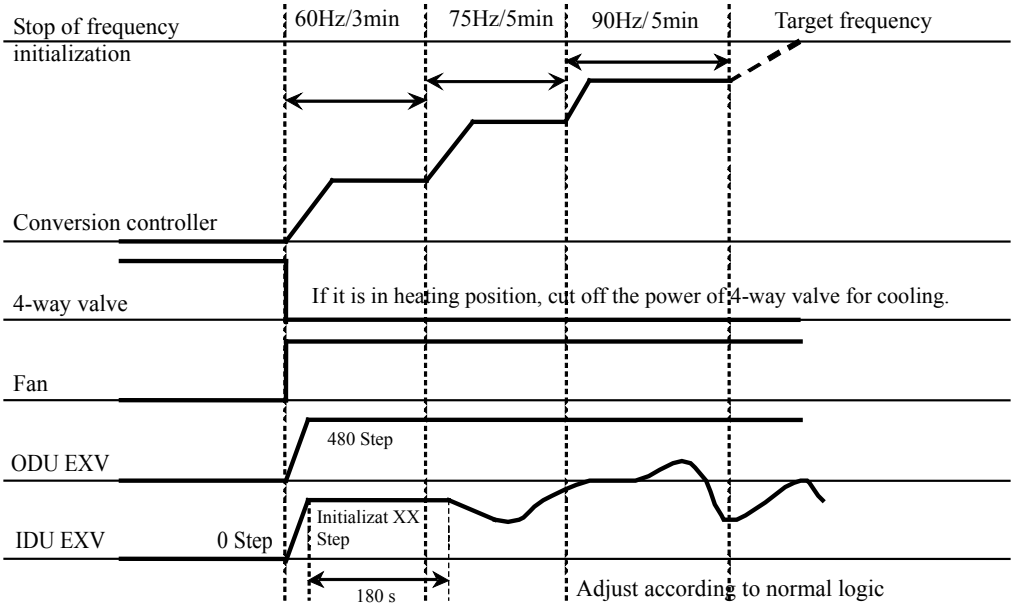


◆ Initial Sequence Chart of Heating Mode:

Before the first starting of compressor, you should keep it running for 3min at 60Hz, and then switch to the target frequency. The dwell time is separately 5min and 5 min when the frequency passes 75 Hz and 90 Hz. If high-pressure frequency-reducing and exhausting frequency-reducing happens during the process, you should quit the initial action, and deal with according to their separate frequency-reducing.

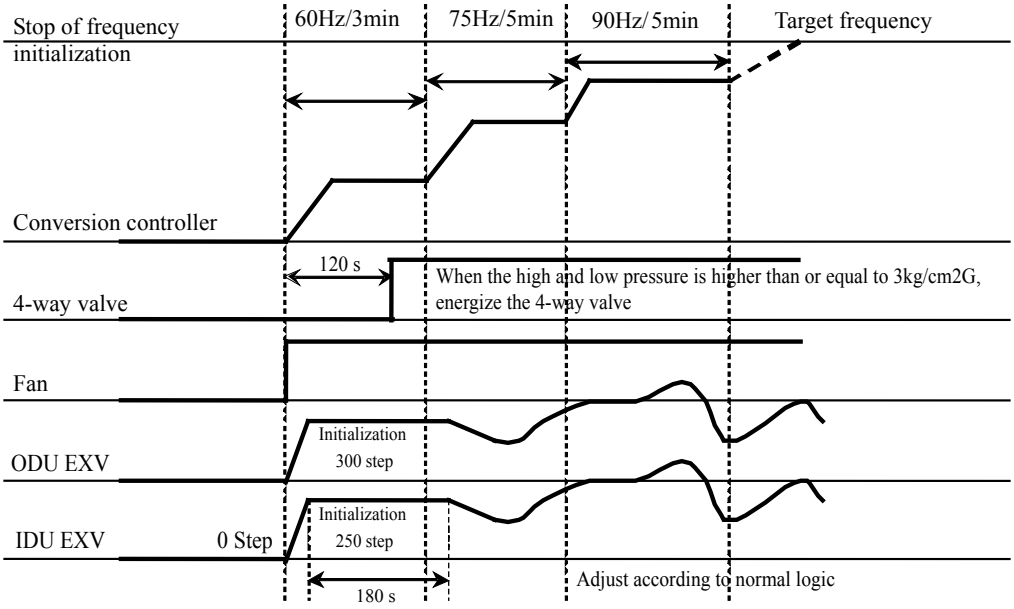


3) Outdoor fan control

Definition of fan speed: Ultra-high fan speed: the upper and lower fans are both at high speed; High fan speed: the upper and lower fans are both at medium speed; Medium fan speed: the upper and lower fan are both at low speed; Low fan speed: the upper fan is at low speed, the lower fan stops; Stop fan speed: both the upper and lower fans stop.

◆ Cooling Mode:

The fan could be switched among ultra-high - high - medium - low fan speed.

The compressor should be forced to run at high fan speed for 35 seconds before started. After the compressor started, you should not stop it within 3 minutes, but you could regulate it up to ultra-high fan speed. The discharge pressure should be measured 3 minutes later, and you can regulate the fans' speed according to the following discharge pressure:

| Absolute pressure value for discharge(℃) | P≤30℃ | 30℃<P≤42℃ | 42℃<P≤49℃ | P<49℃ |
|---|---|---|---|---|
| Cooling | Shutdown the fan forcibly | Turn down one grade (not including stopping windshield ) | Remain | Turn up one grade |

For ultra-high fan speed, you couldn't turn up the grade anymore;

◆ Heating Mode:

The fan should run at high fan speed for 35s before the compressor is started, meanwhile, it is not allowed to turn up to ultra-high fan speed within the earlier 3 minutes after the compressor started, but it could be switched to low speed and stopping fan. You could turn up to the highest level ultra-high fan speed after 3 minutes.

Pressure section:

| Absolute pressure value for discharge(℃) | P≤37℃ | 37℃<P≤48℃ | P≥48℃ |
|---|---|---|---|
| Heating | Turn up one grade | Remain | Turn down one grade |

4) Defrosting Function

◆ Defrosting Start Conditions

Keep heating (the four-way valve is under the heating position) for 50 minutes; when the intermediate sensor temperature and outdoor ambient temperature retain the following curve figure for 120s,

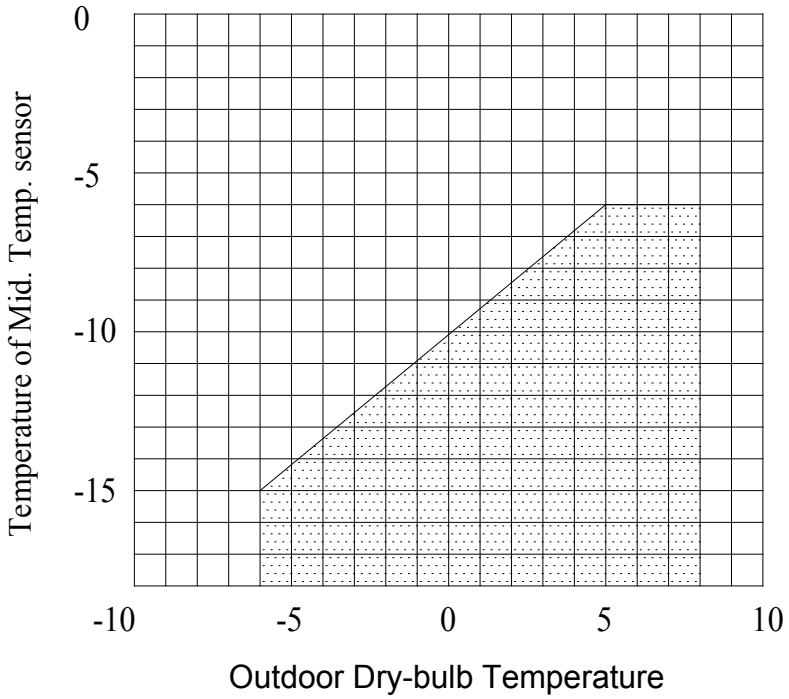


Or the outdoor ambient temperature is below -6℃; and keeps heating (the four-way valve is under the heating position) for 2 hours;

◆ Defrosting Stop Conditions:

Outdoor coil pipe temperature is higher than 15℃ or the defrosting is running for 10 minutes continuously.

◆ Defrosting Movements:

The defrosting is made by switching four-way valve to cooling mode.

The action time for unit defrosting operation is shown as the following figure.

Timing diagram of the defrosting process

Defrosting Process Sequence Chart

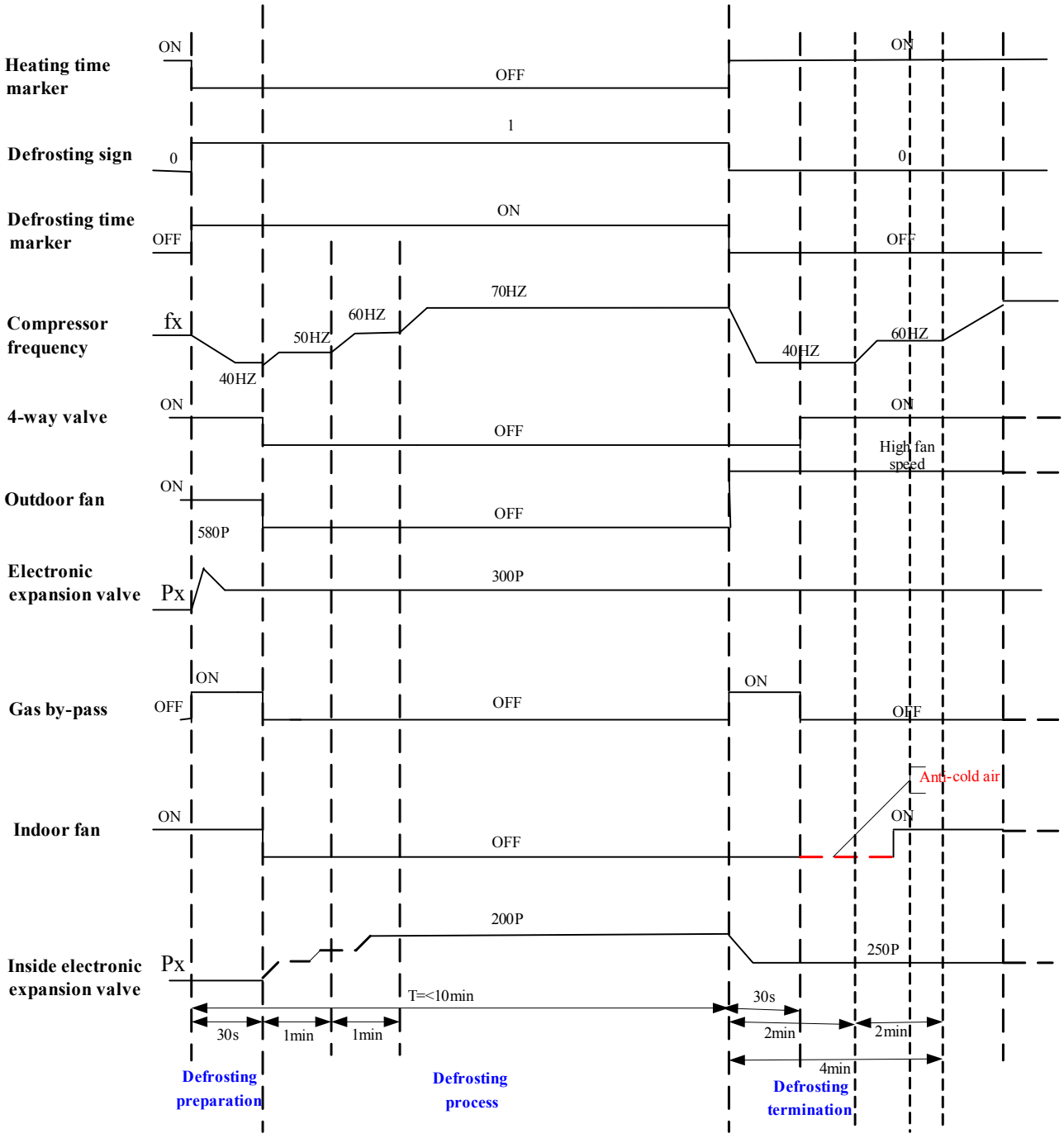

## 3 WIREDLESS REMOTE CONTROLLER

This service manual contain two wireless remote controllers Y512 and YB1FA. Y512 is applicable to all VRF indoor unit.YB1FA is applicable to wall mounted type,floor ceiling type,floor and wall mounted type,floor standing type.

### 3.1 Wiredless Remote Controller Y512

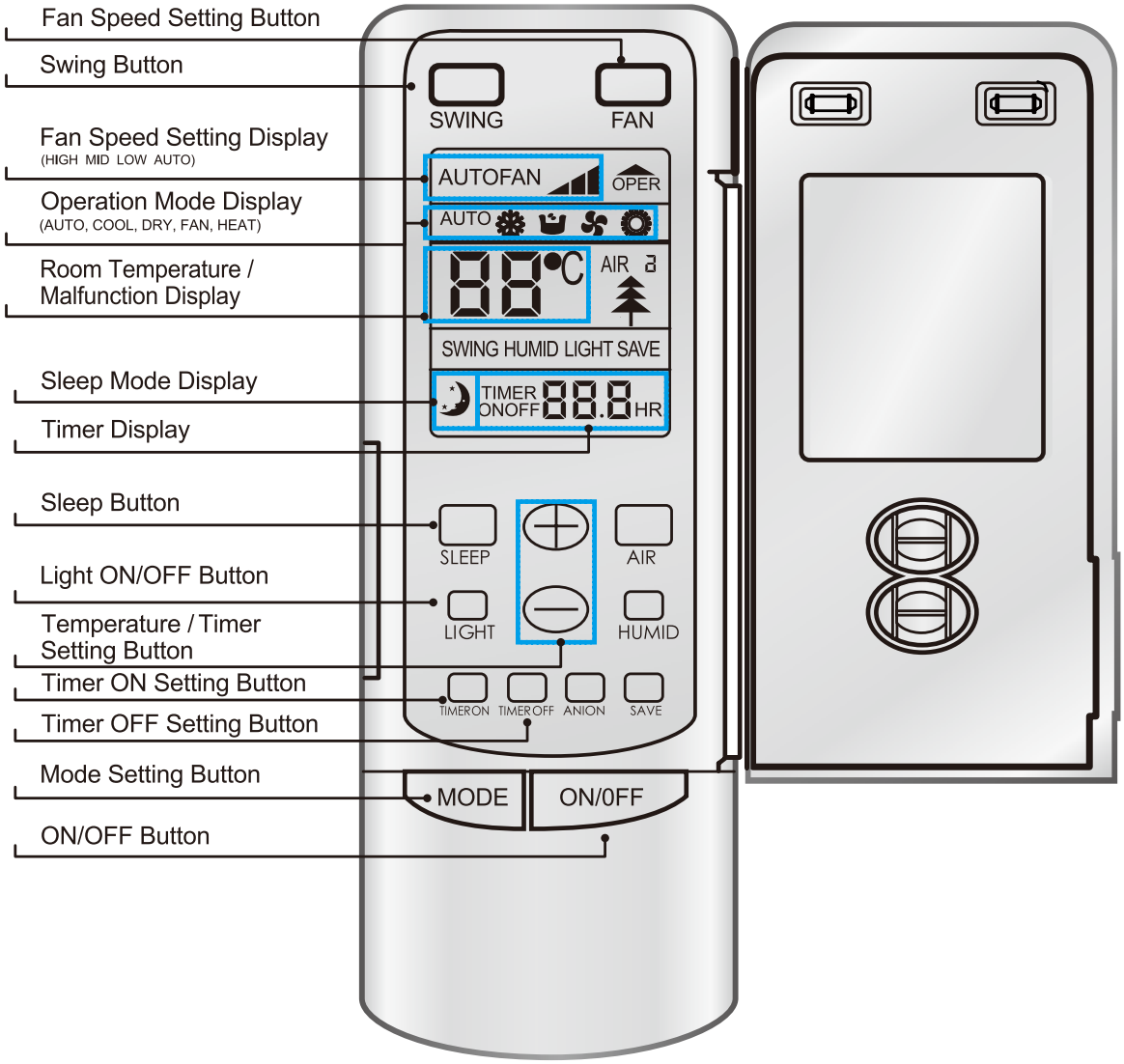


Operation procedure

**Normal procedure**

1) Press the ON/OFF button after the unit is energized, then the unit starts operating.
2) Press MODE button to choose the desired operation mode.
3) Press FAN button to set the fan speed.
4) Press +/- button to set the desired temp.

**Selectable procedure**

5) Press SLEEP mode to set the sleep state.
6) Press TIMER OFF button to set the time.

**NOTE!**

After every indoor unit receives the TURN-OFF signal, the fan and electric expansion valve will continue to work for 20-70 seconds to make use of the rest cool or rest heat, preparing for the next operation, which is a normal phenomenon.

### 3.2 Wireless Remote Controller YB1FA (optional)

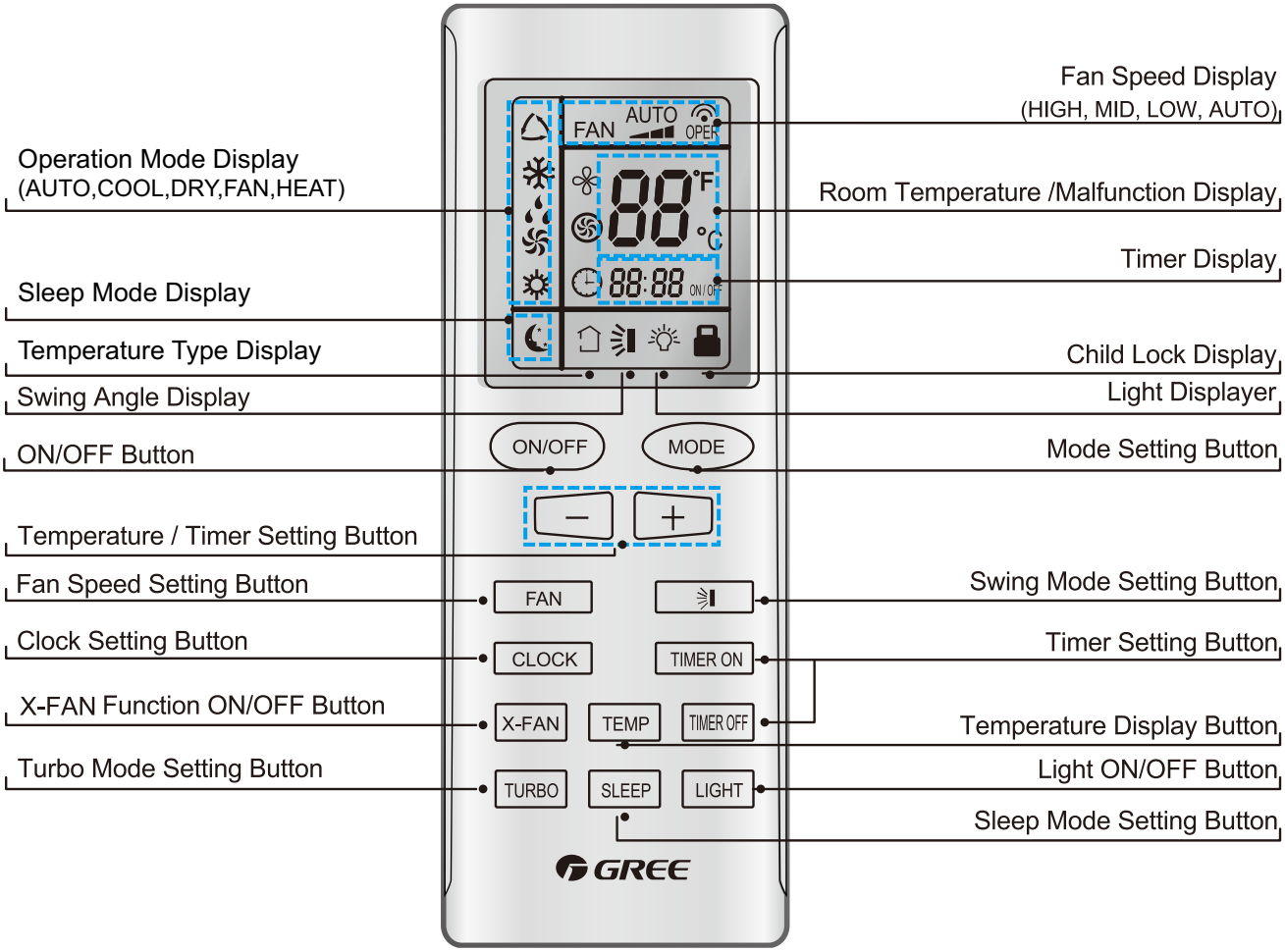

# 4 WIRED REMOTE CONTROLLER

## 4.1 Wired Controller Z60351F,Z60151F,Z63351F,Z63151F

### 4.1.1 Operation View

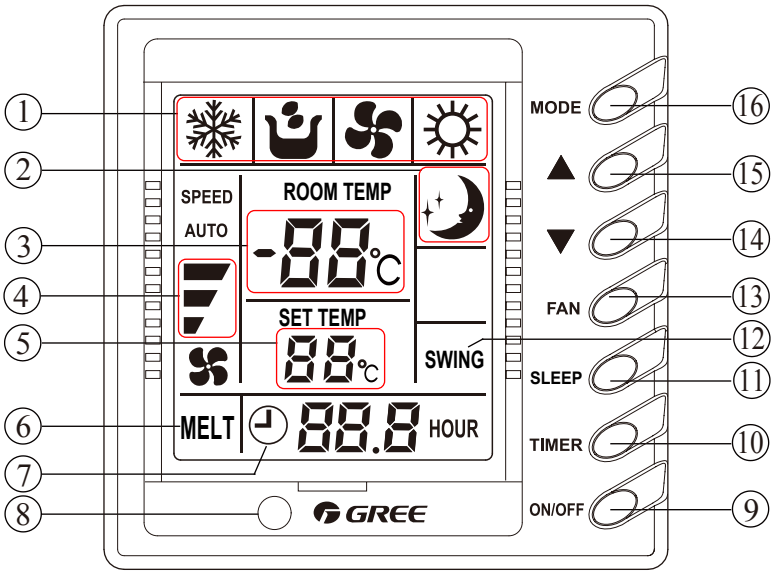


Fig.4.1.1.1 Wired Controller Z60351F,Z60151F

| Various Components of Wired Remote Controller | | | |
|---|---|---|---|
| 1 | Operating mode display (Cool, Dry, Fan, Heat) | 9 | On/Off button |
| 2 | Sleep mode display | 10 | Timer button |
| 3 | Environmental temp. display /Malfunction display | 11 | Sleep button |
| 4 | Fan control display (automatic, high, media, low) | 12 | Swing display |
| 5 | Set Temp. display | 13 | Fan control button |
| 6 | Defrosting display | 14 | Temp./ Timer decrease button |
| 7 | Timer display | 15 | Temp./ Timer increase button |
| 8 | Signal receptor | 16 | Mode button |

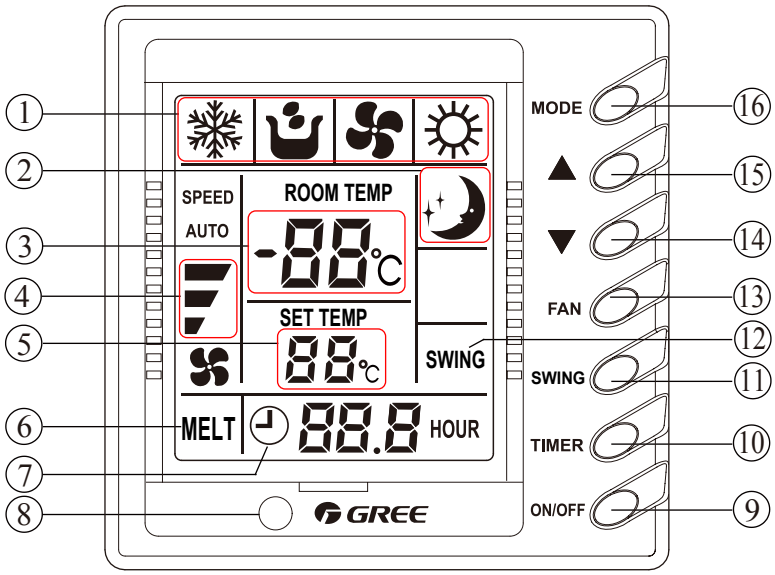


Fig4.1.2.2 Wired Controller Z63351F,Z63151F

| Every part of wired remote controller | | | |
|---|---|---|---|
| 1 | Operating mode display (Cool, Dry, Fan, Heat) | 9 | On/Off button |
| 2 | Sleep mode display | 10 | Timer button |
| 3 | Environmental temp.display / Malfunction display | 11 | Swing button |
| 4 | Fan control display (automatic, high, media, low) | 12 | Swing display |
| 5 | Set Temp. display | 13 | Fan control button |
| 6 | Defrosting display | 14 | Temp. / Timer reducing button |
| 7 | Timer display | 15 | Temp. / Timer rising button |
| 8 | Signal receptor | 16 | Mode button |

4.1.2 Dimension

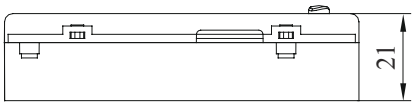


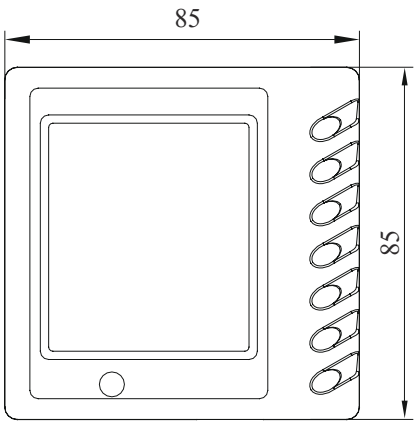


Fig.4.1.2.1 Outline Dimension of Wired Controller

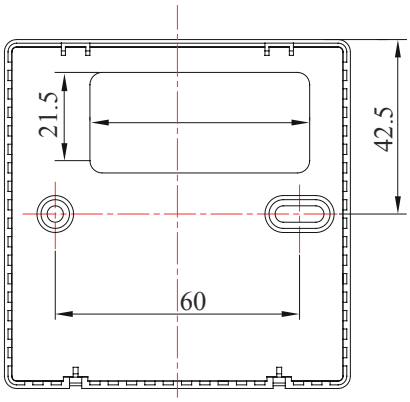


Fig.4.1.2.2 Installation Dimension of Wired Controller

4.1.3 Installation

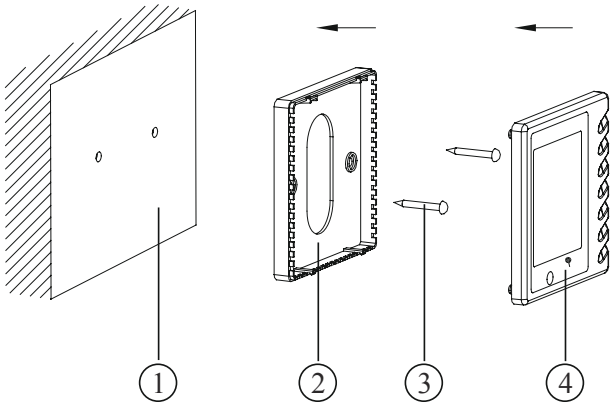


Fig.4.1.3

| SN | 1 | 2 | 3 | 4 |
|---|---|---|---|---|
| Name | Casing base, installed into the wall | Controller Soleplate | Screw M4X25 | Controller Panel |

Notice for installation under the guidance of Fig.4.1.3

◆ Cut off power supply before install the electrical components, it is forbidden to carry out the installation with power on;

◆ Get one end of the 4 core communication cable, put it through the rectangular hole on the base board on the wire remote controller;

◆ Hold the base board of controller on the wall, then fix it to the wall with M4x25 screw;

◆ Plug the 4 core communication cable into the slot on the wired remote controller, then fix the controller panel with base board together;

**4.2 Wired Controller XK02**

4.2.1 Operation View

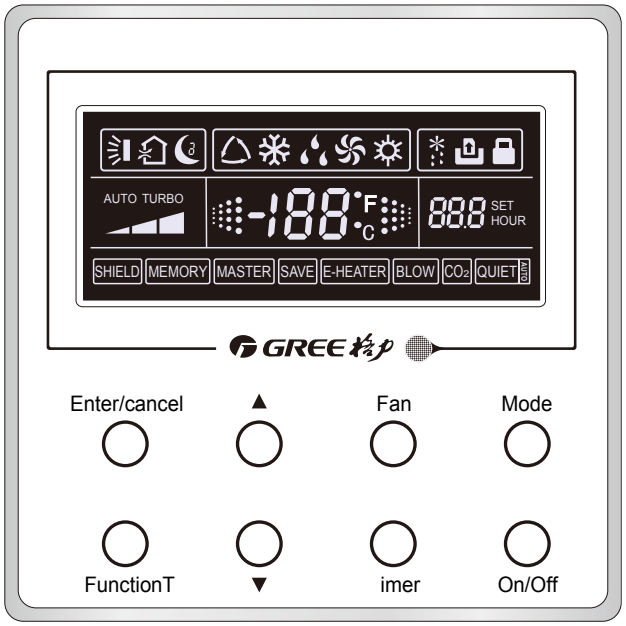


Fig.4.2.1.1

| Denotation | Name | Function |
|---|---|---|
| | Swing | Swing function |
| | Sleep | Sleep states (3 types: sleep 1,sleep2 and sleep 3) |
| | Running mode | Running modes of the indoor unit (Cooling, Dry, Fan and Heating) |
| | Cooling | Cooling mode |
| | Dry | Dry mode |
| | Fan | Fan mode |
| | Heating | Heating mode |
| | Defrost | Defrosting state |
| | Gate-control card | Gate control |
| | Lock | Lock state |
| TURBO | TURBO | Turbo state |
| | Speed | High, middle, low or auto fan speed of the indoor unit |
| | Twinkle | It blinks under on state of the unit without operation of any button. |
| -188 °F °C | Temperature | Ambient/preset temperature value |
| 888 | Timing | Timing state |
| SHIELD | SHIELD | Shield state (buttons, temperature, On/Off, Mode or Save is shielded by the remote monitor. |
| MEMORY | MEMORY | Memory state (The indoor unit resumes the original setting state after power failure and then power recovery) |
| MASTER | MASTER | Master wired controller |
| SAVE | SAVE | Energy-saving state |
| E-HEATER | E-HEATER | Electric auxiliary heating state |
| BLOW | BLOW | Blow state |
| QUIET | QUIET | Quiet state(two types: quiet and auto quiet) |

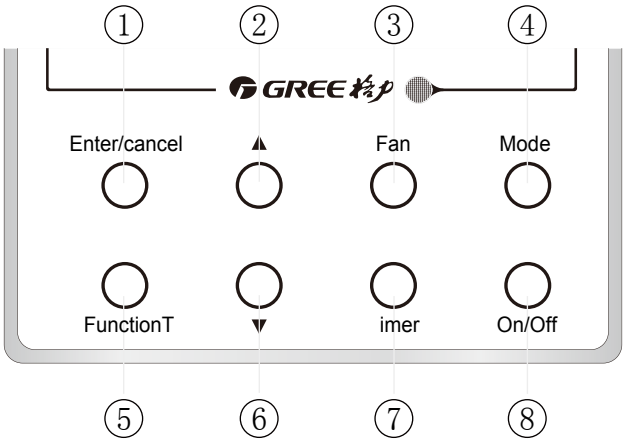


Fig.4.2.1.2

| No. | Button(s) | Function(s) |
|---|---|---|
| 1 | Enter/cancel | 1. Function selection and cancellation;<br>2. Press it for 5s to examine the outdoor ambient temperature. |
| 2 | ▲ | 1.Running temperature setting of the indoor unit, range : 16~30℃<br>2.Timer setting, range:0.5-24hr<br>3.Switchover between quiet/auto quiet or among sleep1/ sleep2 / sleep 3 |
| 6 | ▼ | |
| 3 | Fan | Setting of the high/middle/low/auto fan speed |
| 4 | Mode | Setting of the Cooling/Heating/Fan/Dry mode of the indoor unit |
| 5 | Function | Switchover among the functions of Swing/Sleep/Turbo/<br>Master/Save/E-heater/Blow /Quiet etc. |
| 7 | Timer | Timer setting |
| 8 | On/Off | Turn on/off the indoor unit |
| 4 +2 | Mode + ▲ | Press them for 5s under off state of the unit to enter/cancel the Memory function (If memory is set, indoor unit after power failure and then power recovery will resume the original setting state. If not, the indoor unit is defaulted to be off after power recovery. Memory off is default before delivery.) |
| 3 + 6 | Fan + ▼ | By pressing them at the same time under off state of the unit, ❄ will be displayed on the wired controller for the cooling only unit, while ☼ will be displayed on the wired controller for the cooling and heating unit. |
| 2 + 6 | ▲ + ▼ | Upon startup of the unit without malfunction or under off state of the unit, press them at the same time for 5s to enter the lock state, in which case, any other buttons won't respond the press. Repress them for 5s to quit this state. |
| 4 + 5 | Mode + Func | 1.By pressing them under off state of the unit at the same time, the address of the wired controller will be displayed at once;<br>2. By pressing them for 5s under off state of the unit at the same time, the address setting is available. |
| 1 + 5 | Enter/Cancel + Func | By pressing them simultaneously, the address of the master wired controller will be displayed. |
| 2 + 5 | ▲ + Func | By pressing them for 5s under off state of the unit at the same time, the control of the master wired controller can be canceled. |
| 4+6 | Mode + ▼ | When the unit is turned off, press them for 5 seconds simultaneously, display panel will switch between ℃ and ℉. |
| 5+6 | Function+ ▼ | In any conditions, press them for 5 seconds to review status. Under reviewing status, Mode changes to "00" in temp display area and press "▲"/"▼"to adjust the display. Timer display area will show the s/n of error and error code. The final error shown is the 5th error. |

4.2.2 Dimension

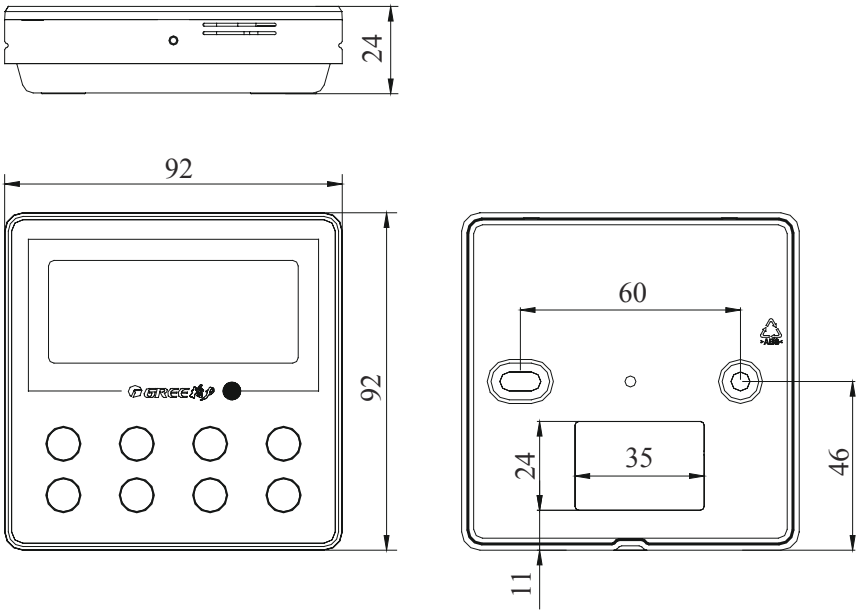


Fig.4.2.2

4.2.3 Installation of Wired Controller

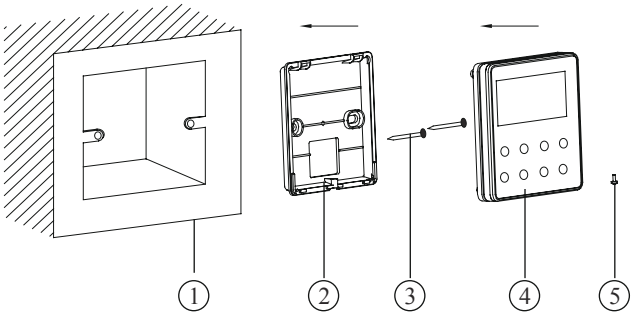


Fig.4.2.3

| No. | 1 | 2 | 3 | 4 | 5 |
|---|---|---|---|---|---|
| Name | Socket housing installed in wall | Base plate of controller | Screw M4X25 | Control Panel | Screw ST2.2X6.5 |

Notice for installation under the guidance of Fig.4.2.3

◆ Cut off power supply before install the electrical components, it is forbidden to carry out the installation with power on;

◆ Get one end of the 4 core communication cable, put it through the rectangular hole on the base board on the wire remote controller;

◆ Hold the base board of controller on the wall, then fix it to the wall with M4x25 screw;

◆ Plug the 4 core communication cable into the slot on the wired remote controller, then fix the controller panel with base board together;

# 5 REGIONAL CONTROLLER

## 5.1 Function

Region monitoring control and region wired control are the two main control functions for region controller.

Region monitoring controller can monitor or control 16 indoor units of a group for inquiry and single or centralized control.

Region wired controller can replace 1-16 selected wired controllers to uniformly set or control the indoor units.

Refer to Fig.5.1.1, Fig.5.1.2 about the Sketch map to the relation among the region controller, region monitoring controller and region wired controller.

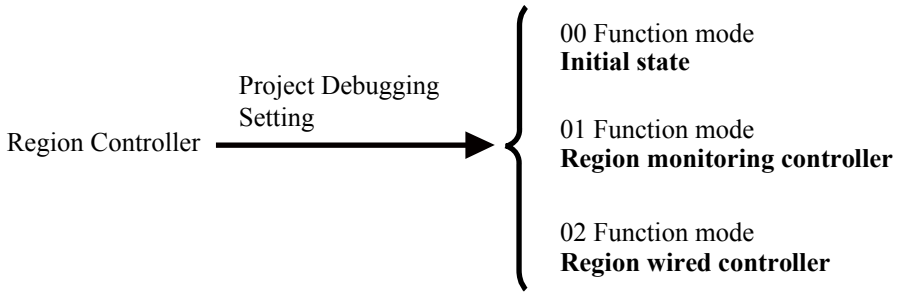


Fig.5.1.1

Before using, the controller functions must be selected by the personnel who performance the installation with the requirements of users. Please refer to Project Debugging Setting section for the details.

Note: If the controller is set to be region wired controller, the wired controller of the selected indoor unit must be removed.

The region controller can be matched with long-distance monitor. As a region monitoring controller, its control is subject to that of the long-distance monitor. In the same group, one of the region controllers can be used as region monitoring controller and matches one or more region wired controller which replace(s) one or more wired controller, in which case, the region monitoring controller can also monitor or control the region wired controller.

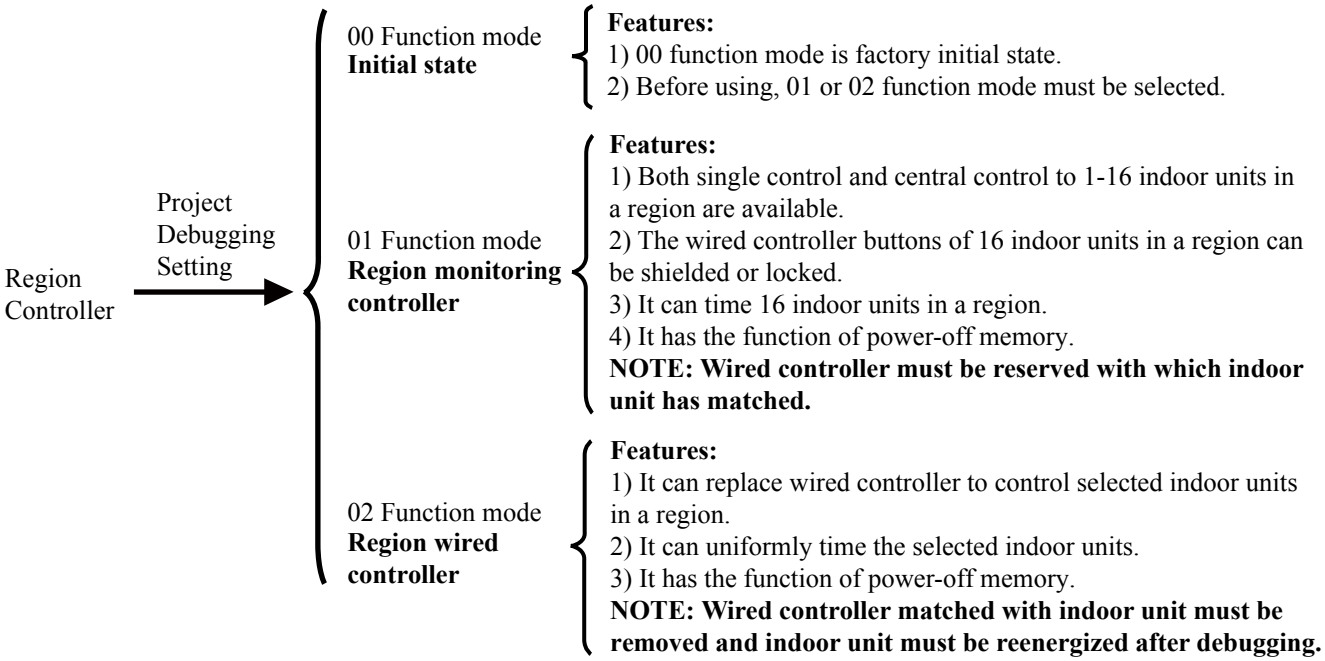


Fig.5.1.2 Sketch map to the relation among the region controller, region monitoring controller and region wired controller

## 5.2 Operation View

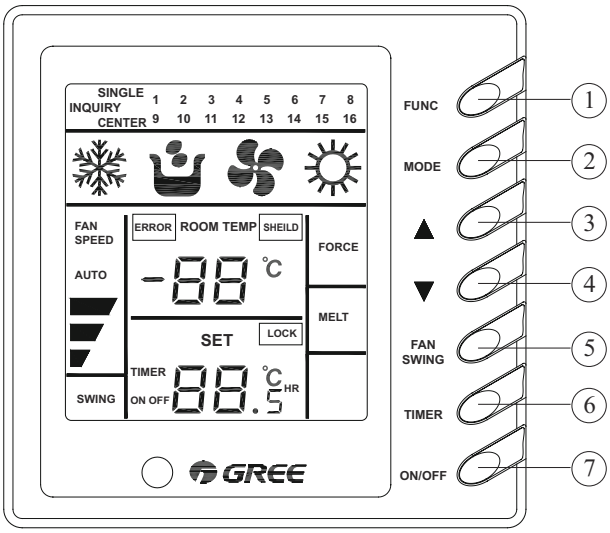


Fig.5.2

Instruction to functions of buttons (Table 5.2)

| No. | Name | Function |
|---|---|---|
| 1 | FUNC (FUNCTION) | A. Switch the control mode of inquiry/single/ central control.<br>B. In central control status, give the central order by successively pressing FUNC button. |
| 2 | MODE | Set cooling/heating/fan/dry mode for indoor unit |
| 3 | ▲ | A. Inquiry status: cycle, increase or decrease No. of indoor units to easily inquire the status of each indoor unit.<br>B. Single/Central control status: set running temp. of indoor unit, maximum is 30 ℃ and minimum is 16 ℃.<br>C. Timer setting status: increase or decrease the timer on/ off time, maximum is 24hr and minimum is 0. |
| 4 | ▼ | |
| 5 | FAN | A. Set the indoor fan speed of hi/mid/low/auto.<br>B. Successively press FAN button to set on/off swing. |
| 6 | TIMER | A. Under single/central control mode, set on /off timer of selected indoor unit<br>B. Under inquiry status, inquire the timer setting of the indoor unit with current address. |
| 7 | ON/OFF | Set ON/OFF of the indoor unit. |
| 2MODE and 7 ON/OFF | Lock | Under single/central control, press MODE and ON/OFF buttons simultaneously to start/ stop the lock of operation to buttons of wired controller for selected indoor units. |
| 2MODE and 6 TIMER | Shield mode | Under single/central control, press MODE and TIMER simultaneously to start/ stop the shield of operation to MODE button of wired controller for selected indoor unit. |
| 4 ▼and 6 TIMER | Shielding Temp. | Under single/central control, press ▼ and TIMER simultaneously to start/ stop the shield of operation to Temp button of wired controller for selected indoor unit. |
| 7 ON/OFF and 6 TIMER | Shielding ON/OFF | Under single/central control, press ON/OFF and TIMER simultaneously to start/ stop the shield of operation to ON/OFF button of wired controller for selected indoor unit. |
| 2 MODE and 3 ▲ | Memory mode | Refer to power-off memory function about the details. |
| 4 ▼and 7 ON/OFF | Selection of function | A. Check the control mode of region monitoring controller / region wired controller<br>B. Set the control mode of region monitoring controller / region wired controller |

Note:
1) The characters with gray back ground indicate buttons. Following part is the same to it.
2) The time of single press of the button is more than 3s, which means successively-press.
3) There isn't the function that the region wired controller shields other indoor wired controller.

## 5.3 Display View

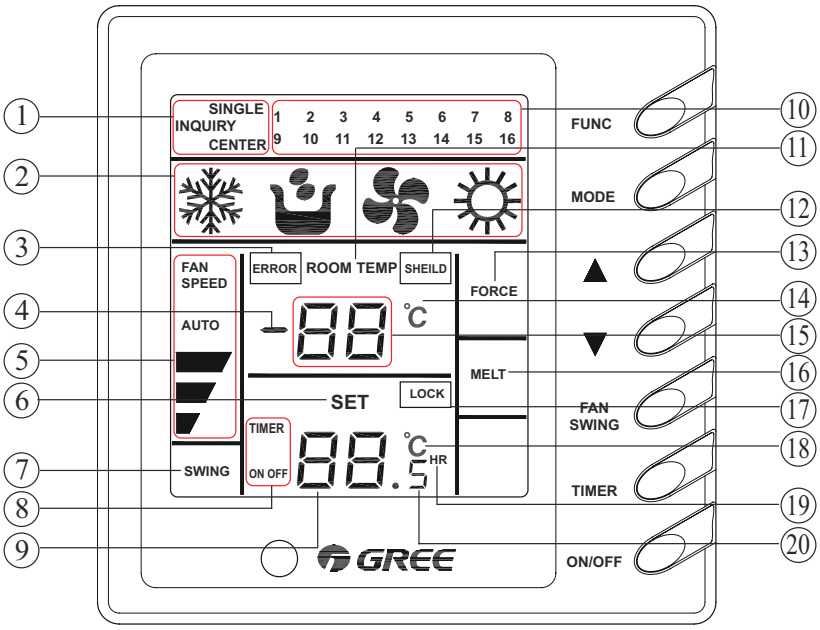


Fig.5.3

| No. | Display name | Instruction to display |
|---|---|---|
| 1 | Control mode | Inquiry state, “INQUIRY” is displayed.<br>Single control state,”SINGLE” is displayed.<br>Centralized control state, “CENTER” is displayed. |
| 2 | Running mode | Each indoor unit running mode is displayed. |
| 3 | Error | “ERROR” is displayed during any malfunction to indoor or outdoor unit in a group. |
| 4 | - | “-” is displayed when there is no malfunction to selected indoor unit and the ambient temp. is below zero. |
| 5 | Fan speed display | Hi, mid, low or auto speed of indoor fan is displayed. |
| 6 | Set | “SET” blinks when the unit is on and commanded.<br>“SET” is displayed when the unit is on without command. |
| 7 | Swing | Swing running of indoor unit is displayed. |
| 8 | Timer | “TIMER ON/OFF” is displayed when setting timer or inquiring timer state. |
| 9 | Setting temp. and timer time | During timer inquiry, integer of setting time of timer is displayed.<br>During timer setting, integer of setting time of timer is displayed.<br>Set temp. value is displayed when the unit is not during timer inquiry or setting. |
| 10 | No. of indoor unit | Under inquiry state, No. of online indoor units are displayed and No. of selected indoor unit will blink.<br>Under single control state, only No. of selected indoor unit is displayed.<br>Under centralized state, No. of all online indoor units are displayed. |
| 11 | Room temp. | “ROOMTEMP” is displayed for no malfunction, but isn’t for malfunction. |
| 12 | Shield | Centralized controller<br>A. Under inquiry state,” SHIELD” will be displayed when selected indoor unit is shielded.<br>B. Under control state,” SHIELD” will be displayed during setting or giving the shield order.<br>Region wired controller:” SHIELD” will be displayed when selected units are shielded during long-distance monitoring. |
| 13 | Force | “FORCE” is displayed when indoor unit is forced to run. |
| 14 | ℃ (room temp.) | “ ℃ ” is displayed when there is no malfunction. |
| 15 | Room temp. or error code | Room temp. value is displayed during no malfunction to selected indoor or outdoor unit.<br>Error code is displayed during malfunction to selected indoor or outdoor unit. |
| 16 | Melt | “Melt” is displayed during defrosting. |

| | | |
|---|---|---|
| 17 | Lock | Region monitoring controller<br>A: Inquiry state: “LOCK” is displayed when selected indoor unit is locked.<br>B: Control state: “LOCK” is displayed during setting or giving the lock order.<br>Region wired controller: “LOCK” is displayed when selected unit is locked in long-distance monitoring. |
| 18 | ℃ (set temp.) | Set temp. value is displayed when the selected indoor unit is on and not in timer inquiry or setting status. |
| 19 | HR (hour) | “HR” is displayed during timer inquiry or setting. |
| 20 | .5 | “.5” is displayed when the timer time value includes 0.5 hr and the unit is during timer inquiry or setting. |

Note:
1) Contents in the double quotation marks indicate the display in LCD. Following part is the same to it.
2) Online indoor units to Mini Centralized Controller indicate that in a region. Following part is the same to it.
3) No signal control function for region wired controller, and “SINGLE” won’t be displayed either.

### 5.4 Connection Between Controller and Unit

Insert the 4-core twisted pair line to wired controller, if which is with the indoor unit, into region controller wiring terminal CN1 (or CN2), and then connect the other wiring terminal CN2 (or CN1) with the main board of indoor unit.

If there is no wired controller with indoor unit, introduce a 4-core twisted pair line to indoor unit main board and connect it with region controller wiring terminal CN1 (or CN2).

**Note:**

Any main board of the indoor unit controlled by the region controller can be connected. If the region controller is used as a region wired controller, wired controller with the indoor unit must be removed.

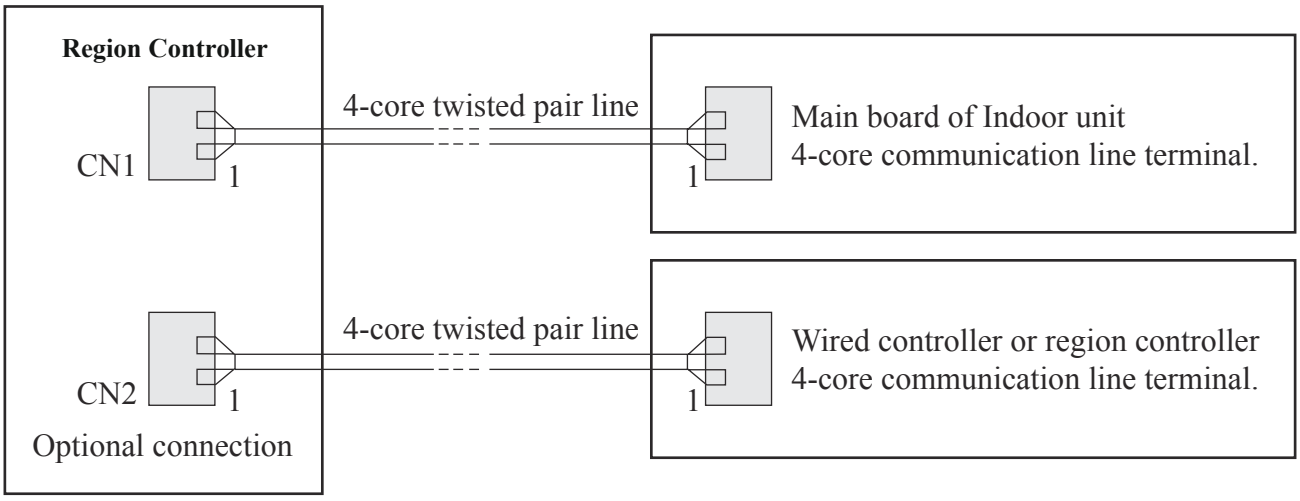


Fig.5.4 Power cords and communication lines for region controller

Before installation and connection, make sure the power supply is off. After installation and connection, check the connection result again to prevent loose or short.

There are 4 connection lines (included in the 4-core twisted pair line) to the controller, from CN1 or the upper and right CN2 to the upper they respectively are: Ground line (GND), communication line A (A), communication line B(B) and power cord (+12 v).

⚠ **Note:**

During following connection of wirings, pay special attention to them to avoid malfunction to units for electromagnetic interference.

1 ) Keep the signal lines or wirings (communication) of region controller or wired controller at least 20 cm from the power cords or connecting lines between indoors and outdoors to prevent abnormal communication.

2 ) Shielding twisted pair line must be adopted as signal line or wiring (communication) once the unit is installed in the place where there is serious electromagnetic interference.

## 6 SMART ZONE CONTROLLER

### 6.1 Function

Simple centralized controller can connect to indoor units of 3 sets of VRF outdoor units. It can directly connect to 16 indoor units in a same network without adding communication module. It can search status of a indoor unit and display it by LCD. Controlled items are mode, timer, fan speed, temperature of a single unit, centralized setting and shield, etc.

### 6.2 Operation View

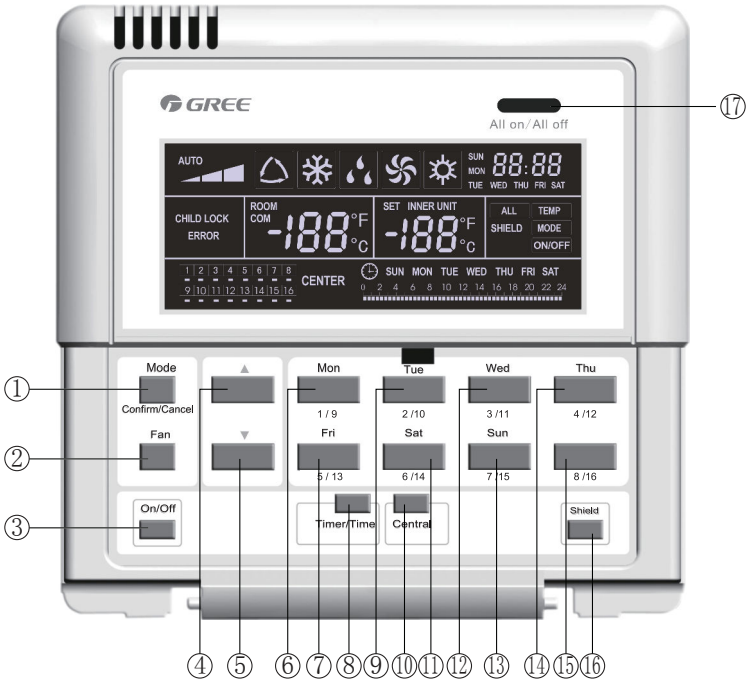


Fig.6.2

| No. | Name | Function Description |
|---|---|---|
| 1 | Mode | It is used for the switchover among different modes |
| 2 | Fan | It is used to set the fan speed, high, medium, low or auto. |
| 3 | On/Off | It is used to set the on/off status of the indoor unit. |
| 4 | ▲ | 1. Under the single/centralized control status:It is used to set the running temperature of the indoor unit with max.30℃ anmin.16℃ .<br>2. Under the timing setting status:It is used to set the timing period with max.24 hours and min.0 hour.<br>3. Under the clock setting status: it is used to set the hour (max.:23,min.:0) and minute (max.:59, min.: 0) of the clock. |
| 5 | ▼ | |
| 6 | Mon<br>1/9 | It is used for the switchover between unit 1 and unit 9;<br>Under the timing or clock setting status, it indicates Monday. |
| 7 | Fri<br>5/13 | It is used for the switchover between unit 5and unit 13<br>Under the timing or clock setting status, it indicates Friday. |

| | | |
|---|---|---|
| 8 | Timer/Time | It is used to set the timing or on/off time of the selected indoor unit as well as to set the clock of the system. |
| 9 | Tue<br>2/10 | It is used for the switchover between unit 2 and unit 10;<br>Under the timing or clock setting status, it indicates Tuesday. |
| 10 | Central | It is used for the switchover between single and centralized control modes. |
| 11 | Sat<br>6/14 | It is used for the switchover between unit 6 and unit 14;<br>Under the timing or clock setting status, it indicates Saturday. |
| 12 | Wed<br>3/11 | It is used for the switchover between unit 3 and unit 11<br>Under the timing or clock setting status, it indicates Wednesday. |
| 13 | Sun<br>7/15 | It is used for the switchover between unit 7 and unit 15<br>Under the timing or clock setting status, it indicates Sunday. |
| 14 | Thu<br>4/12 | It is used for the switchover between unit 4and unit 12<br>Under the timing or clock setting status, it indicates Thursday. |
| 15 | 8/16 | It is used for the switchover between unit 8 and unit 16 |
| 16 | Shield | It is used to deactivate some or all functions of a single or a group the indoor unit(s). |
| 17 | All on/off | It is used to start/stop all indoor units. |

## 6.3 Display View

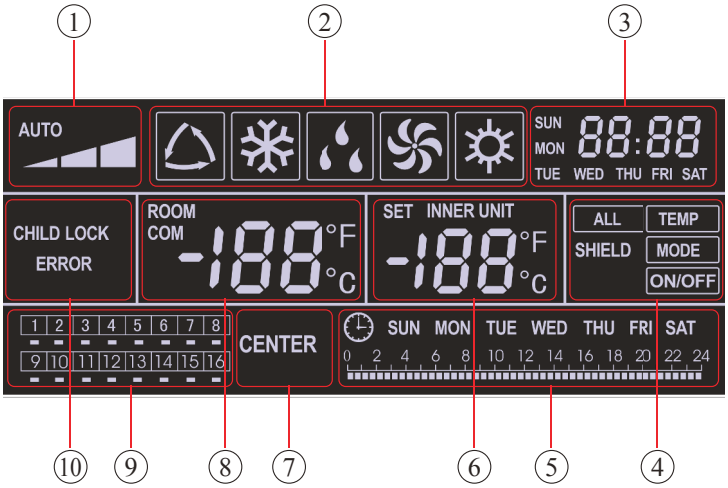


Fig.6.3

| No. | Name | Description |
|---|---|---|
| 1 | Fan speed | It displays the fan speed of the indoor unit, high, medium, low and auto. |
| 2 | Running mode | It displays the running mode of the indoor unit, auto, cool, dry, fan and heat. |
| 3 | System clock | It displays the current time (hour and minute) in 24-hour time system and also the week day. |
| 4 | Shield | It displays the shield status, “ALL’, “TEMP”, “MODE” and ‘On/Off”. |
| 5 | Weekly timer | It displays the timing period (unit: 0.5 hour) which will circulate every week. |
| 6 | Set temperature<br>Indoor unit code | It displays the set temperature, indoor unit code (01-16), and symbols of Celsius and Fahrenheit scale. |
| 7 | Control mode | It displays “CENTER” under the centralized control mode and no display under the single control mode. |
| 8 | Ambient temperature<br>Serial port | It displays the ambient temperature, serial port as well as symbols of Celsius and Fahrenheit scale. |
| 9 | Indoor unit code<br>On/off status | Numbers indicate the indoor unit codes which will be displayed when the corresponding indoor unit is online; “▭” indicates the on/off status of the indoor unit, its flashing for “on” or else for “off” |
| 10 | Error<br>Child lock | It displays the error codes when some error(s) arises and also “CHILD LOCK” when this function is activated. |

## 6.4 Network Topological Diagram

6.4.1 Network of Simple Centralized Controller:

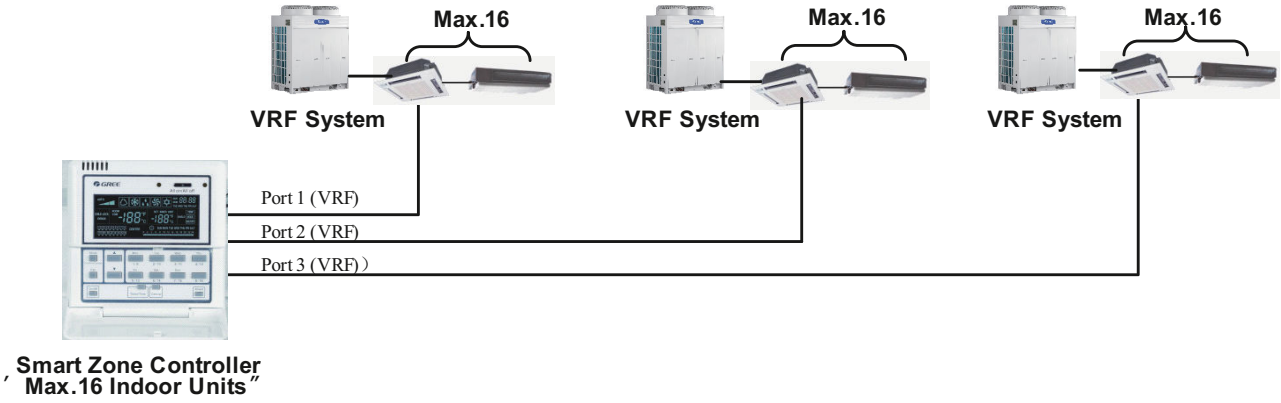


Fig. 6.4.1

**Note: Simple centralized controller can connect to maximum 3 sets of VRF outdoor units but the indoor unit which it connects can't exceed 16 sets.**

6.4.2 Relationship of simple centralized controller, remote monitoring and centralized controller:

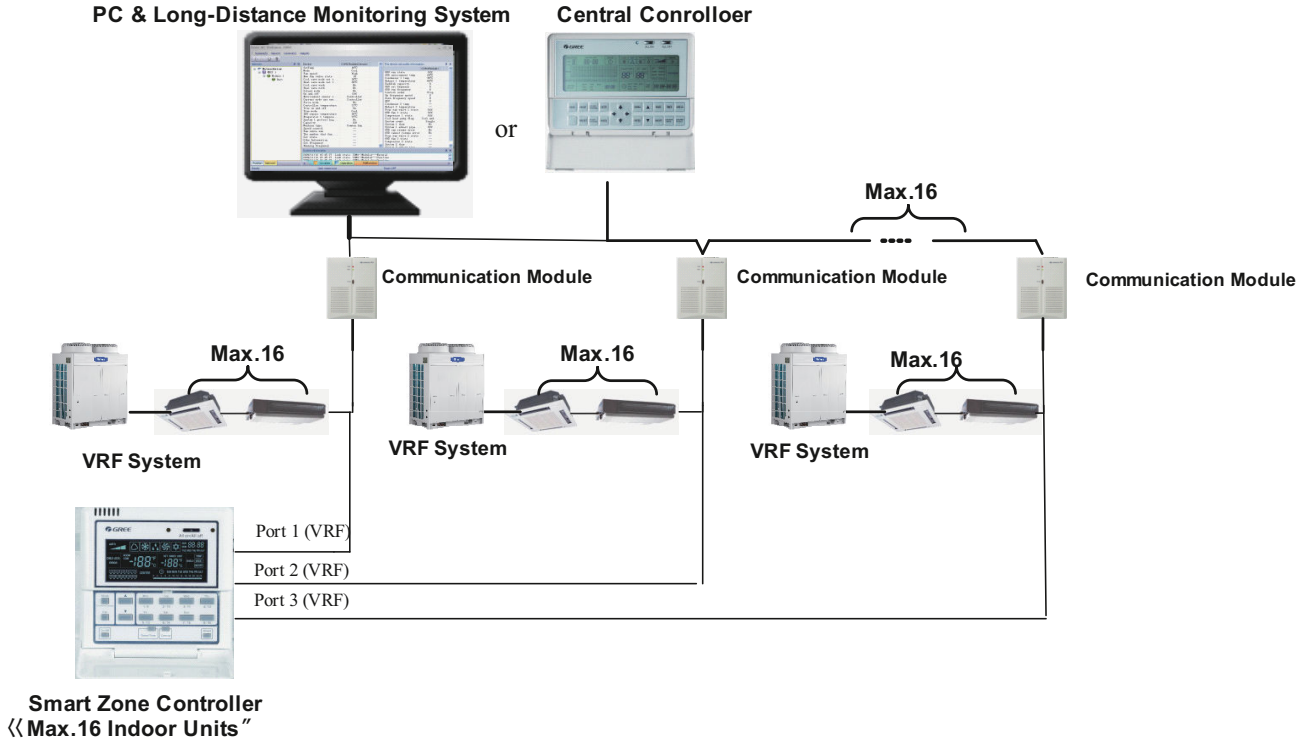


Fig. 6.4.2

**Note: simple centralized controller can compatible to centralized controller/remote monitoring. But centralized controller/remote monitoring has the priority.**

## 6.5 Installation and Debugging

6.5.1 Installation

5.5.1.1 Installation Dimension Diagram

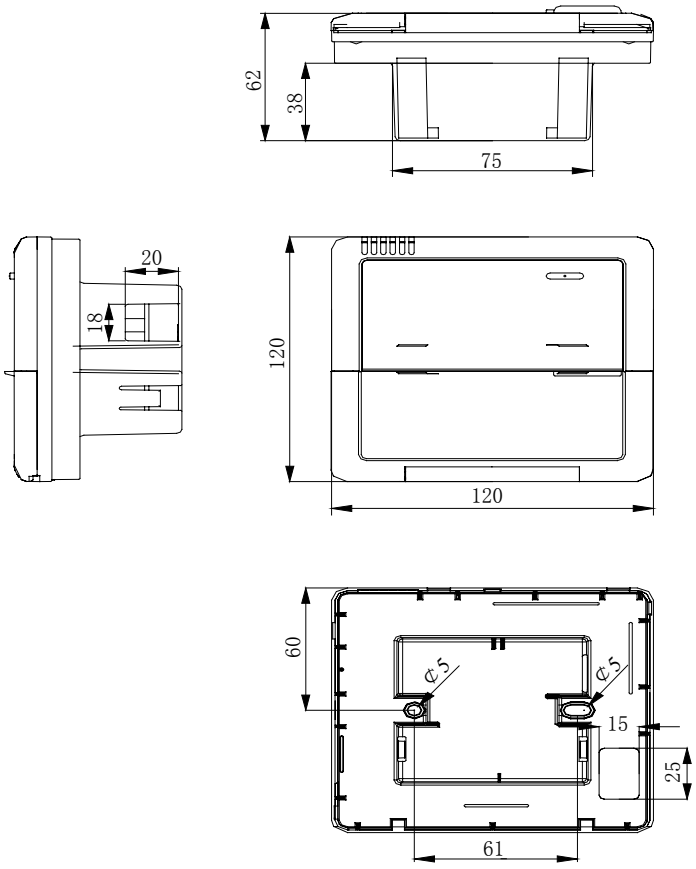


Fig.6.5.1 Installation Dimensions Diagram

6.5.1.2 Interfaces

See Fig.6.5.2 for the interfaces of the display board and see Fig.6.5.3 for the interfaces of the power supply module.

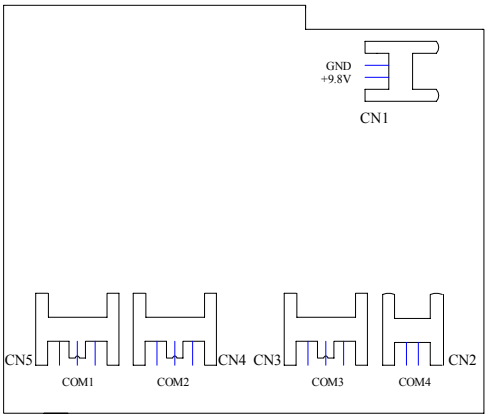


Fig.6.5.2 Interfaces of the Display Board

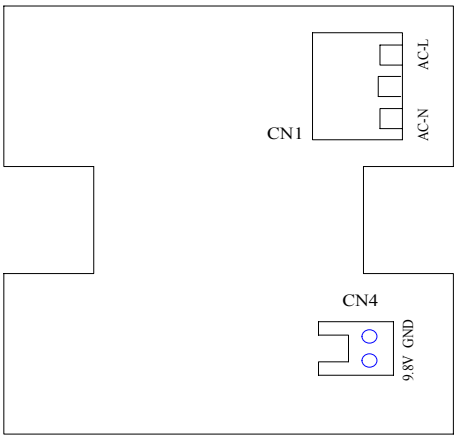


Fig.6.5.3 Interfaces of the Power Supply Module Board

a.Interface of the Power Supply

The interface CN1 of the power supply module board is for the connection board of the external power cord, the terminal AC-N for the neutral line, the terminal AC-L for the live line and the middle terminal keeps open.

The interface CN4 of the power supply module board which is for the power supply of the display board, is connected with the interface CN1 of the display board through the two-core wire provided by Gree.

b.Communication Interface

The interfaces CN2, CN3, CN4 and CN5 of the display board are for communication, and CN2 namely COM4 is for the communication o the duct type unit (2-pin); CN5, CN4, CN3 namely COM1, COM2, COM3 respectively are for the communication of the multi VRF system (3-pin).

6.5.1.3 Preparation and Connection of the Communication Line

a. The communication line between the centralized controller and the unit should be prepared by the user according to the actual project.

b. Preparation and connection of the communication line for the multi VRF system

1 ) One three-core communication line is needed to connect one set of multi VRF system to one interface (COM1, COM2 or COM3) of the smart zone controller.

2 ) One end of the communication line is connected with the smart zone controller and the other is connected with the three-pin socket of the indoor unit.

c. Preparation and connection of the communication line for the duct type unit

1 ) The communication line for the duct type unit is the two-core line provided by Gree (one end is the two-core head and the other end is the crystal head, code: 40113325)

2 ) Where there are N sets of duct type units, then N+1 communication lines are needed.

3 ) Connect the two-core head of one communication line to the port COM4 of the smart zone controller and connect the two-core heads of N communication lines to the two-pin socket of the wired controller of the duct type unit.

4 ) The user can prepare the extension line and connect the wires inside the crystal head according to the actual need.

**Note: one set of Multi VRF system consists of one multi VRF outdoor unit and one or more than one multi VRF indoor units. And one set of duct type unit consists of one duct type outdoor unit and one duct type indoor unit.**

6.5.1.4 Installation

The installation can proceed on when the installation location is selected and the installation steps are as follows:

a. Firstly make sure where to install the smart zone controller.

b. Embed the power supply box (2) as Fig.5.5.6 for the installation of the bottom case (3).

c. Connect the power cord and the communication line of the display board and then let both go through the power supply box (2).

d. Fix the bottom case on the power box (2) by screws.

e. Tidy up the power cord and the communication line inside the smart zone controller.

f. Close the cover (5)

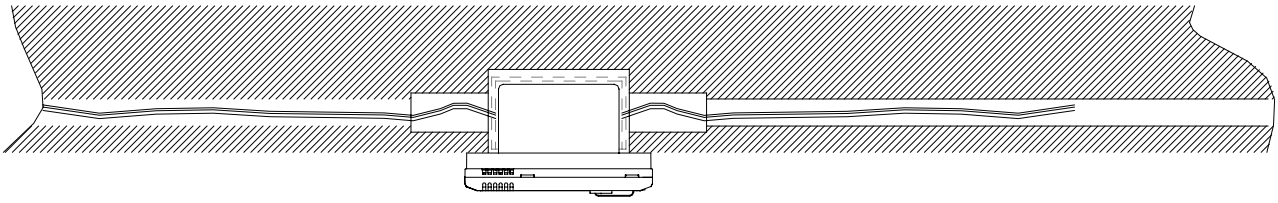

Fig.6.5.4 Concealed Cable Installation 1 (right-left wiring)

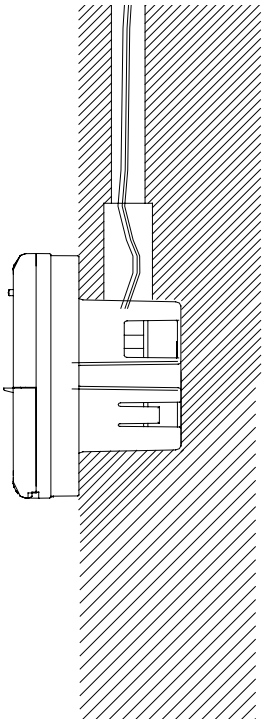

Fig.6.5.5 Concealed Cable Installation 2 (up-down wiring)

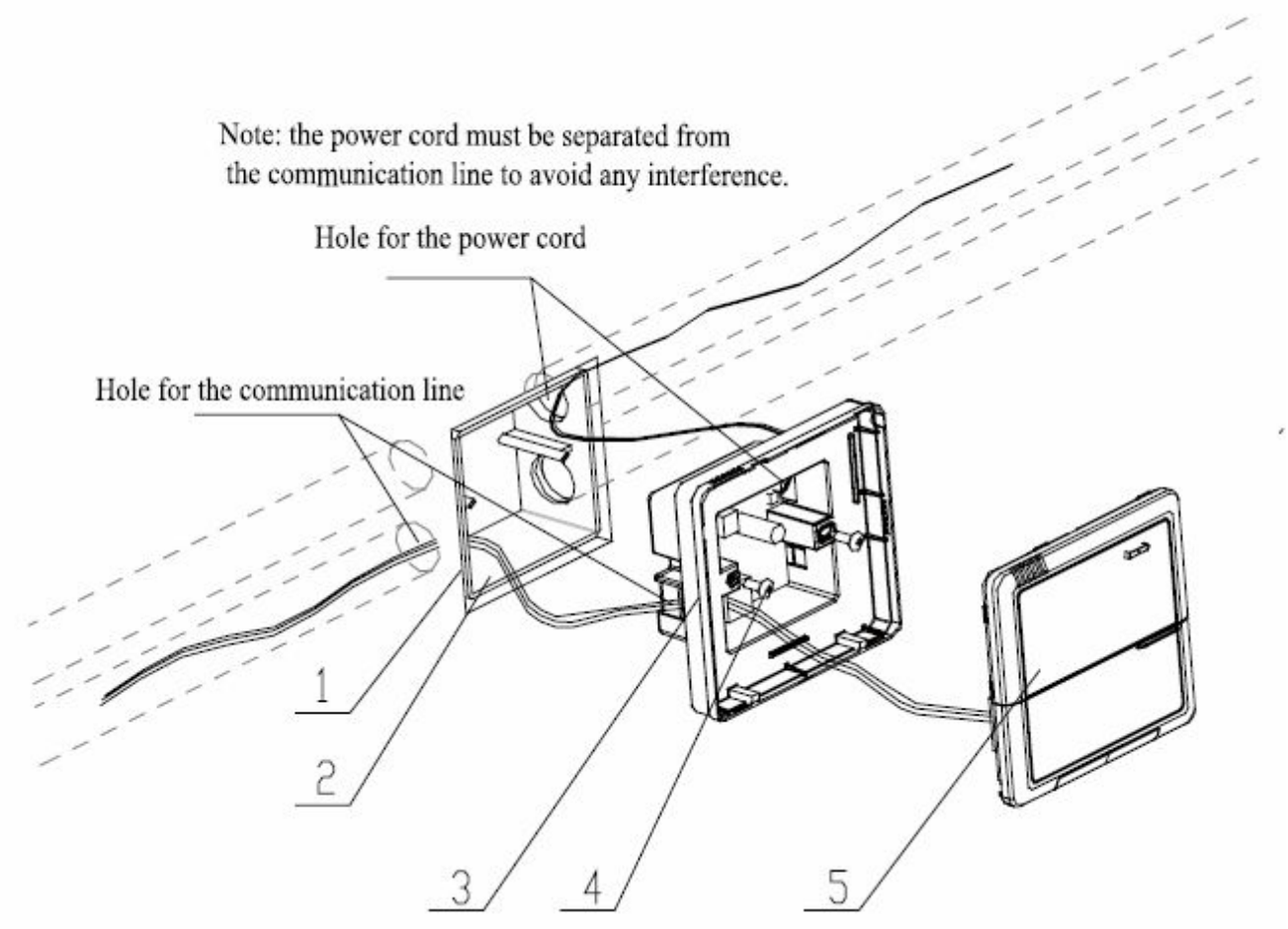


Fig. 6.5.6 Installation Diagram

| Serial No. | Description |
|---|---|
| 1 | Wall |
| 2 | Power Supply Box (86) |
| 3 | Bottom Base(including power supply module board) |
| 4 | Screw |
| 5 | Top Cover(including the display board) |

After the installation, it is necessary to make the debugging to guarantee the normal communication.

### 6.5.2 Debugging and Viewing the Port No. and the Indoor Unit Address

Debugging setting: In the event that the unit is initially powered on, the setting for the project changes, or the serial port is replaced, and then it is available to go to the debugging status by pressing “Mode” and “Thu” simultaneously for five seconds, under which page, it is enabled to check automatically and distribute the address of the indoor unit. 10 minutes later, the debugging is finished and the indoor unit which gains the address is under control and the unaddressed indoor unit is not.

Viewing the serial port and the indoor unit address: It is available to go to the debugging page by pressing “Mode” and “Thu” simultaneously for five seconds, under which page it is enabled to view the serial port and address of the corresponding indoor unit

The press on “Confirm/Cancel” can confirm this debugging setting and go to the viewing state of the current indoor unit; otherwise this setting will not be saved.

See Fig.6.5.7 for the debugging operation. Fig.6.5.7 shows the indoor unit 1 and indoor unit 2, both of which are connected with the port COM2. The address of one is 01 and the other is 04.

Press “**Mode**” and “**Thu**” simultaneously for five seconds to go to the debugging page.

Press the code button of the indoor unit to inquire about its corresponding serial port and address.

Press “**Confirm/Cancel**” to make a confirmation.

Fig.6.5.7 Debugging

### 6.5.3 Labeling

A label is provided to identify the relationship of the indoor unit No. and the corresponding room name. The user can write down the indoor unit No. and its corresponding room name on the label which then will be stuck to the inside of the cover of the smart zone controller so that the user can be clear about the control object.

For instance, when the user has installed the air conditioners in the child room, bedroom and living room, after the debugging it is available to view the indoor unit No. of each room and get clear about their corresponding relationship.

| Room Name | Child Room | Bedroom | Living Room |
|---|---|---|---|
| Indoor Unit Address | Port 1,Indoor Unit 04 | Port 1, Indoor Unit 05 | Port 1,Indoor Unit 06 |
| Indoor Unit No. | 1 | 2 | 3 |

After get clear about the relationship of the indoor unit no. and the room, the user can write “Child Room”, “Bedroom”, “Living Room” on the place “1”, “2” and “3” respectively on the label and then stick the label to the inner side of the smart zone controller.

See 6.5.8 for the label.

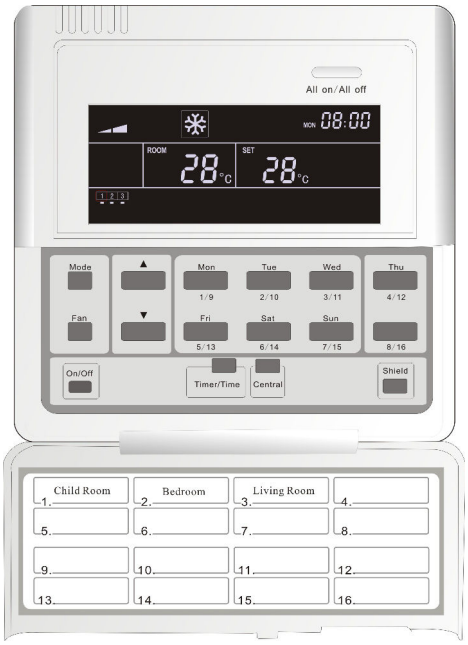


Fig.6.5.8 Label of the Smart Zone Controller

## 6.6 Attachment

Error code list:

Errors code list of Multi VRF Indoor Units

| Code | Description |
|---|---|
| E1 | High pressure protection of the compressor |
| E2 | Anti-freezing protection of the indoor unit |
| E3 | Low pressure protection of the compressor |
| E4 | Discharge temperature protection of the compressor |
| E5 | Over-current protection, overload protection of compressor, drive error |
| E6 | Communication error |
| E7 | Mode conflict |
| E9 | Water overflow protection |
| EH | E-heater protection |
| F0 | Ambient temperature sensor error of the indoor unit |
| F1 | Error of coil pipe inlet sensor of the indoor unit |
| F2 | Error of coil pipe intermediate sensor of the indoor unit |
| F3 | Error of coil pipe outlet sensor of the indoor unit |
| F4 | Ambient temperature sensor error of the outdoor unit |
| F5 | Error of coil pipe inlet sensor of the outdoor unit |
| F6 | Error of coil pipe intermediate sensor of the outdoor unit |
| F7 | Error of coil pipe outlet sensor of the outdoor unit |
| F8 | Error of discharge temperature sensor 1 (fixed) |
| F9 | Error of discharge temperature sensor 2 (digital) |
| FA | Error of oil temperature sensor 1 (fixed) |
| Fb | Error of oil temperature sensor 2 (digital) |
| Fc | High pressure sensor error |
| Fd | Low pressure sensor error |

# 7 CENTRALIZED CONTROLLER

## 7.1 Central Control ZJ7011

### 7.1.1 Function

**Main characteristics of Centralized Controller:**

◆ A set of Centralized Controller can control 64 communication modules and can connect to as much as 1024 indoor units. It can conduct individual control with any separated area or unified control. It can monitor or control On/Off, Mode, Temperature setting and Timer On/Off of indoor unit etc.

◆ It can realize the central, single or select control to all indoor units.

◆ It can organize several indoor units into groups as you desired and conduct unified control—Group select control.

◆ Error contents are shown by codes. Corresponding communication module numbers of the indoor units with error contents would blink for rapid inspection and repair (There is sound warning for a few errors).

◆ Timer function. Every indoor unit can set Timer On/Off time by central, single or select control. Both Timer On time and Timer Off time can be set at the same time, and it is available to set the timer to which day among the 7 days from Sunday to Saturday works.

◆ Clock function displays in year, month, day, hour, minute and week, and the clock can be manually adjusted.

◆ Indoor and outdoor units online auto detect, display and working state indication.

◆ Self-inspection function is remained.

◆ Centralized Controller and several communication modules formed communication net, the length of communication wire of the net can be as long as 1km (without using communication repeaters).

**Note: this centralized controller shall be used with communication module ZJ301-W.**

### 7.1.2 Operation View

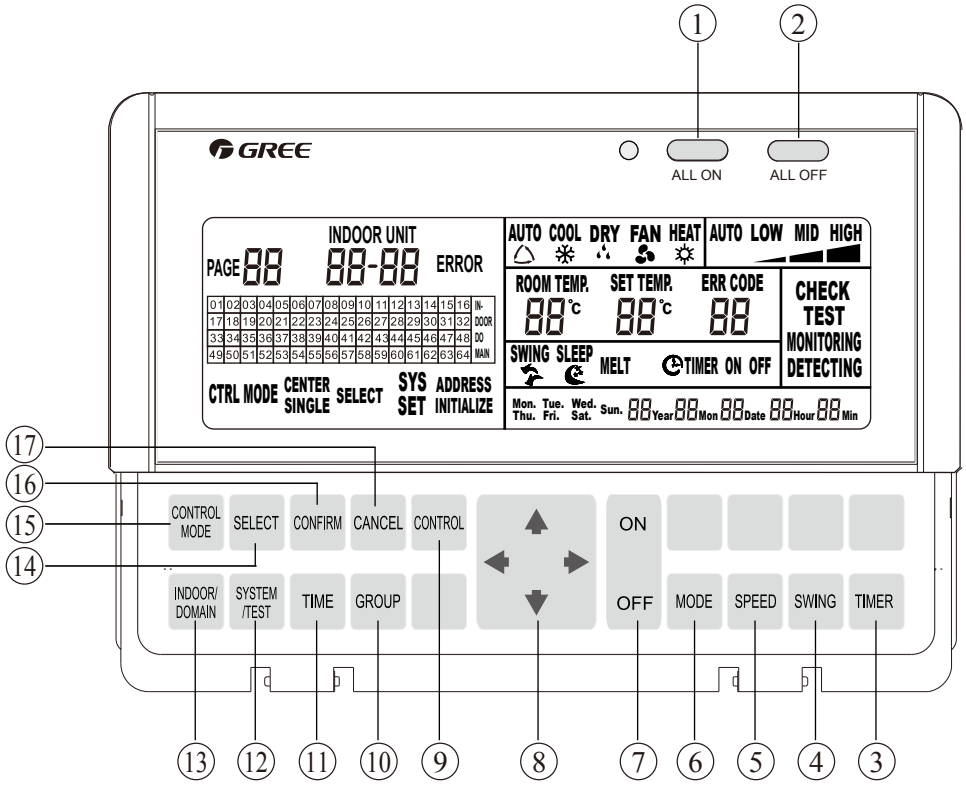


Fig.7.1.2

| | | |
|---|---|---|
| 1 | ALL ON | This central control has Sequence On function, that enable conduction to sequence control to communication modular in interval of 2 seconds, communication modular controls Sequence On of indoor units (to lower impact to power network). |
| 2 | ALL OFF | This central control has Sequence Off function, that enable conduction of sequence control to communication modular in interval of 2 seconds, communication module controls Sequence Off of indoor units (to lower impact to power network). |
| 3 | TIMER | Set and check the time of Timer On and Timer Off of indoor unit and date mode. |
| 4 | SWING | Set if indoor unit swings |
| 5 | SPEED | Set fan speeds of High, Medium, Low or Auto for indoor unit |
| 6 | MODE | Set modes of Cool, Dry, Fan or Heat for indoor unit |
| 7 | ON/OFF (2) | For controlling units' on and off. |
| 8 | LEFT/RIGHT<br>UP/DOWN | It works as direction and adjusting under every operation function. Such as: When checking, it can move to the required indoor unit or communication modular by using this button; when adjusting time, press LEFT (/RIGHT) to shift "Y/M/D" etc. and press UP (/DOWN) to adjust value |
| 9 | CONTROL | Under control mode, press this button after setting state of indoor unit, control to indoor unit would be conducted by corresponding control mode. |
| 10 | GROUP | Press button under checking state to begin information check and set of grouped indoor unit, grouped information is for select control. |
| 11 | TIME | Set system time |
| 12 | SYSTEM/TEST | Begin setting of central control run mode, it is not recommended to be used by users. |
| 13 | INDOOR/DOMAIN | Shift display domain and indoor wired air condition control. DOMAIN corresponding to display on line communication modular, INDOOR corresponding to display on line indoor control. |
| 14 | SELECT | Select required control or setting object; repress the button to the object is to cancel. |
| 15 | CONTROL MODE | Begin control setting mode, and Central Control, Select Control and Single Control can be selected.<br>Central Control: Control all indoor units under domain by present set state.<br>Single Control: Control present indoor unit by present set state.<br>Select Control: Control selected indoor unit by present set state, it also called grouped control |
| 16 | CONFIRM | Confirm the operated operation is effective |
| 17 | CANCEL | Press this button during process of setting function to exit the already made function setting operation. Such as, if central control mode were selected, press CANCEL at this time would back to control mode selecting state. |

7.1.3 Display View

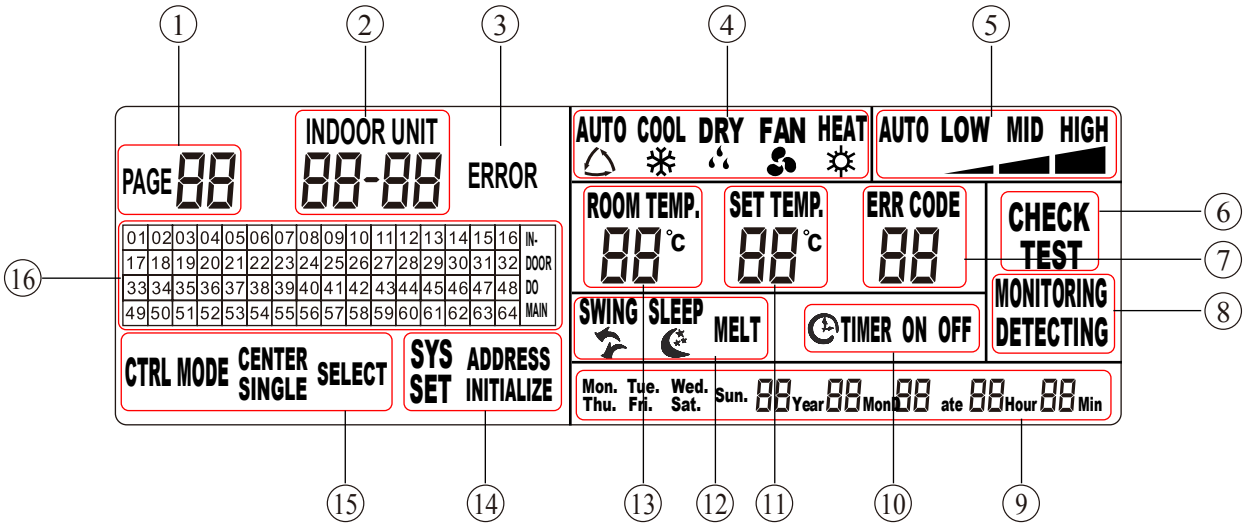


Fig.7.1.3

| | | |
|---|---|---|
| 1 | Pagination/displays present domain | Under select control mode, group no. that is present controlling is displayed;<br>Under addresses setting state, present Soft Add is displayed. |
| 2 | Present unit no. | Displays the soft address of communication module that the present checking or controlling indoor unit is belonged as well as the address of indoor unit;<br>Format: Soft add—Indoor unit add |
| 3 | Error | Displays when there is error at any indoor or outdoor unit. |
| 4 | Operation mode | Displays every operation state mode of indoor unit |
| 5 | Speed display | Displays High, Medium, Low and Auto speed of indoor unit |
| 6 | Check | Under group control mode, it is displayed when checking grouping information;<br>Under address setting mode, it is displayed when checking hard address. |
| 7 | Error code | Displays when abnormal occur on operation state of present indoor unit. |
| 8 | Operation monitoring and controlling /monitoring | When central control works in normal, operation monitoring displays; when control signal is transmitted, operation monitoring and controlling is displayed. |
| 9 | System time | Displays present time, format is Y, M, D, H, M and week. |
| 10 | Timer setting | Timer On/Off on when Timer On/Off is set to present indoor unit |
| 11 | Pre-set temperature | Displays value of pre-set temperature |
| 12 | Swing and Defrost | Displays operation of swing at indoor unit and defrost at outdoor unit |
| 13 | Ambient temperature | Displays value of ambient temperature of present indoor unit |
| 14 | System setting | Setting operation mode of central control. It should be completed by installation personnel, but not for users. |
| 15 | Control mode | Displays 3 control modes of Central, Single and Select controls |
| 16 | Displays of soft address | When Indoor on, addresses of present online indoor unit is displayed;<br>When domain on, soft address of present online communication module is displayed;<br>Specific location of controlled indoor unit can only be ascertained<br>When soft address fits Project Installation List. |

Instruction to display interface:

System Setting: Including Address Setting and other functions, and it is set when installation personnel are adjusting units. It is not recommended that users operate it. The usage of this function requires password.

Address Setting: Since characters from 01 to 64 are fixed as the addresses of controlling communication modules displayed by central control (hereinafter called soft addresses), and the addresses of communication modules themselves (hereinafter called hard addresses) are value from 0~254, thus there is address matching problem between central control and controlled communication module. In order to solve this problem, address mapping setting is required to be conducted before project adjusting!

### 7.2 Centralized Controller CE51-24/E(M)

7.2.1 Function

Used in multi-VRF system, a set of centralized controller can connect with 64 communication modules to control 1024 sets of indoor units. Through it, indoor unit's ON/OFF, operation mode, set temperature, fan speed, swing state etc. can be queried and controlled. This device can realize single/group/center control and conveniently manage the air conditioners through weekly timer and long-distance shield setting.

◆ Single control is to control a single unit;
◆ Group control is to control a preset group of indoor units;
◆ Center control is to control all indoor units;
◆ Single/group/center shield is to shield the operation parameters of indoor units from long distance;
◆ Single/group/center weekly timer is to set TIMER ON/OFF of the air conditioner from long distance;
◆ Clock setting is to set week, hour and minute and let them show;

The centralized controller can automatically detect the online "region" and indoor unit and display present indoor unit's operation mode, set temperature, fan speed, swing, weekly timer, shield, etc.For the purpose of quick inspection, upon malfunction of any indoor unit, its corresponding error code and region no. will be displayed and blink. The centralized controller integrating multiple communication modules makes up a communication network. Without repeaters, the communication wires' distance can be up to 1km.

**Note: this centralized controller shall be used with communication module ME30-00/E2 or ME30-24/E2(M).**

7.2.2 Operation View

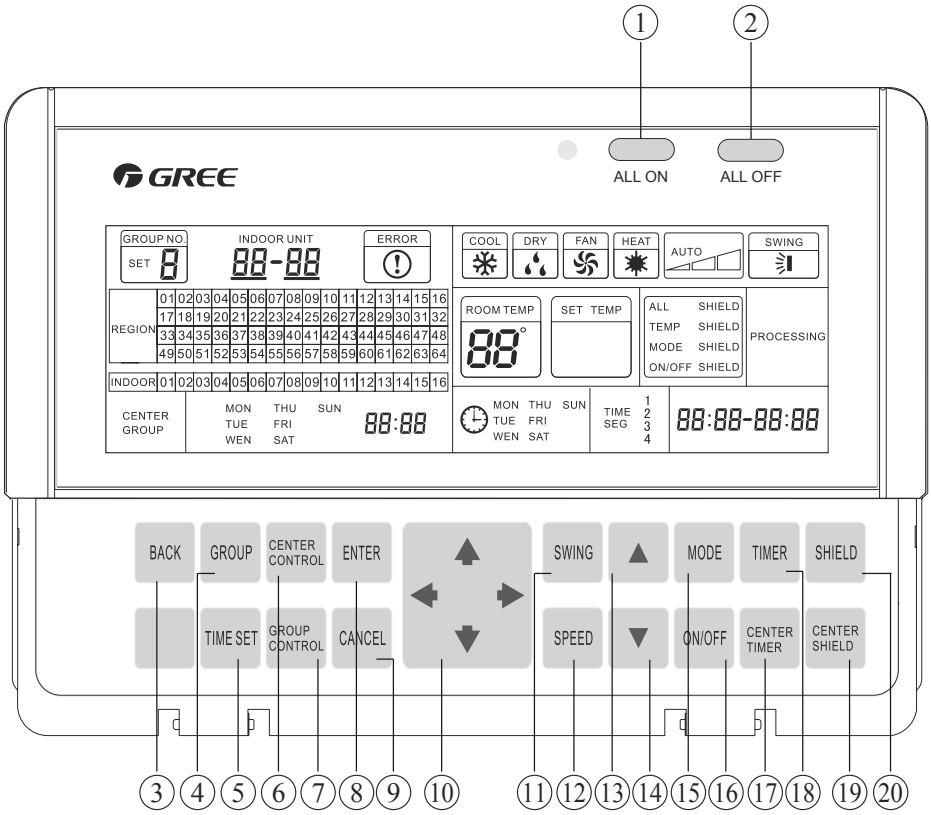


Fig.7.2.2

| No. | Description | Function |
|---|---|---|
| 1 | ALL ON | Start up all indoor units |
| 2 | ALL OFF | Stop all indoor units |
| 3 | BACK | Back to the previous menu of current display. |
| 4 | GROUP | Press this button in query state to query and set group information |
| 5 | TIME SET | Set system clock |
| 6 | CENTER CONTROL | Uniformly control the operation parameters of all indoor units |
| 7 | GROUP CONTROL | Uniformly control the operation parameters of one group of indoor units |
| 8 | ENTER | Press this button during function setting to confirm the setting |
| 9 | CANCEL | Press this button during function setting to cancel the setting. For example, press CANCEL button when CENTER CONTROL has been set, the state will go back to slection of control method. |
| 10 | UP/DOWN LEFT/RIGHT | For direction indication. For example, press these buttons in query state to select the indoor unit or communication modules to be queried. |
| 11 | SWING | Set swing or not |
| 12 | SPEED | Set high,medium,low or auto fan speed |
| 13 | ▲ Increase | Increase set temperature |
| 14 | ▼Decrease | Decrease set temperation |
| 15 | MODE | Set COOL,DRY,FAN or HEAT mode |
| 16 | ON/OFF | Set unit on or off |
| 17 | CENTER TIMER | Centrally set or query timer |
| 18 | TIMER | Set or query timer |
| 19 | CENTER SHILED | Centrally shield functions of all indoor units |
| 20 | SHIELD | Shield functions of a single or a group of indoor unit/s |

## 7.2.3 Display View

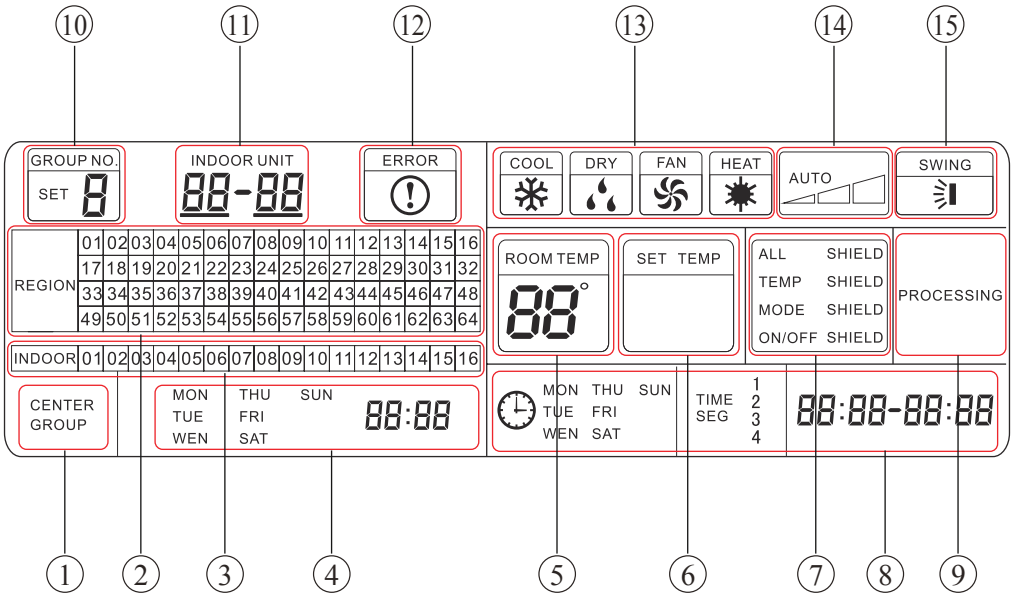


Fig.7.2.3

| No. | Description | Instruction to Displaying Contents |
|---|---|---|
| 1 | CENTER/GROUP | “GROUP” displayed during group control operation or grouping indoor units<br>“CENTER” displayed during center control ,center shield or center timer operation. |
| 2 | REGION NO. | Online or selected region No. displayed(Note 1) |
| 3 | INDOOR UNIT NO. | Online or sleected indoor unit no. displayed |
| 4 | System’s time display | Display present time by week, hour and minutes |
| 5 | ROOM TEMP | Room temperature of present indoor unit |
| 6 | SET TEMP | Set temperature display |
| 7 | SHIELD | All/terperature/mode/on/off shield from long distane |
| 8 | Timer setting display | Weekly timer display |
| 9 | PROCESSING | Displayed during sending out control command |
| 10 | GROUP NO. | Group No. display |
| 11 | INDOOR UNIT | Display region No.and unit no. of present indoor unit |
| 12 | ERROR | Error display upon malfunction of any unit |
| 13 | Opearation mode | Operation mode display of indoor unit |
| 14 | Fan speed display | High, medium, low or auto fan speed display |
| 15 | SWING | Swing operation mode display of indoor unit |

### 7.2.4 Installation

After selection of installation location, perform the installation as follow:

1) Confirm installation hole site:

To be installed in the wall

(1) Dirll a hole of of 180mm×106mm×72mm (L×W×D)

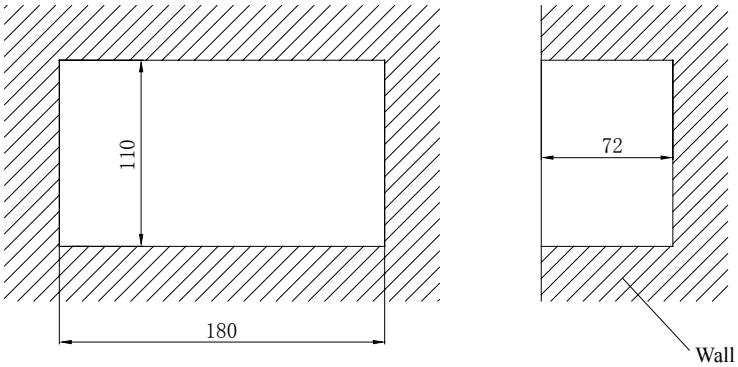


Fig.7.2.4.1

(2) Make 4 pieces of wooden or plastic chucks

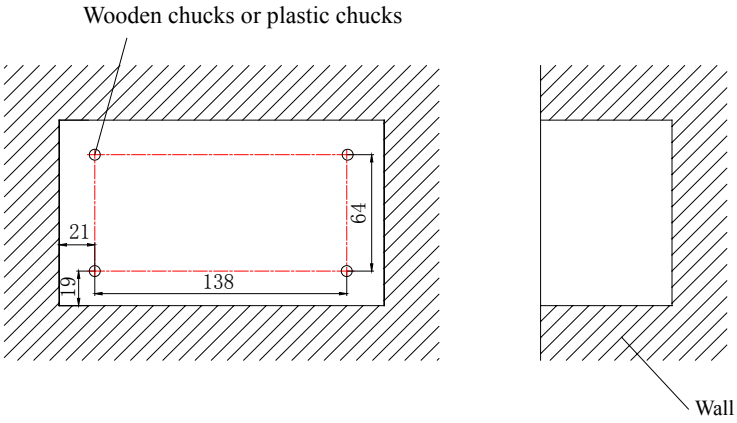


Fig.7.2.4.2

To be installed in the control cabinet:

Make 4 holes inside the wall of control cabinet according to the following dimension in the figure.

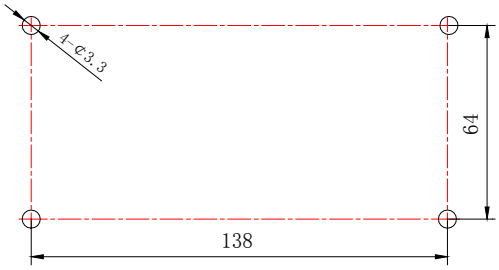


Fig.7.2.4.3

2) Install the electric box cover on the wall or in the control cabinet.

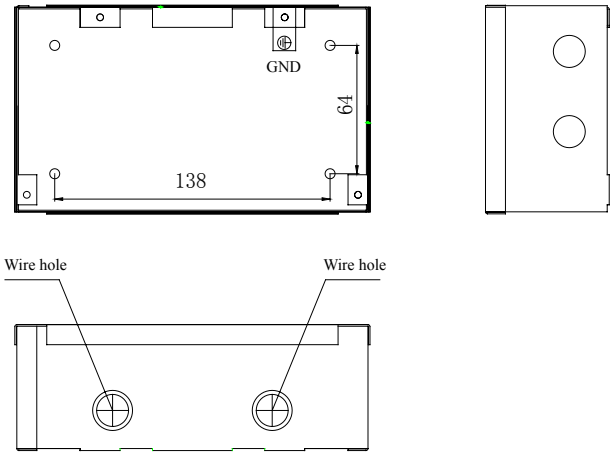


Fig.6.2.4.4

3) Connection of power cord and communication wire

Make the communication wire through the wire hole of the electric box cover and insert it into the communication port. Make the Power cord through the other wire hole on the electric box cover should be connected with the wiring terminal on the mainboard of controller ,as shown in the figure below. L connects with live wire, N connects with neutral wire and ground wire connects to the corresponding position marked on the electric box. Wire hole can be freely set according to actual condition.

Power cord width connected with wiring terminals shall be in the range of 1.5~2.2mm.

Rated voltage of wiring terminal is 220~240 VAC.

Power frequency is 50/60HZ.

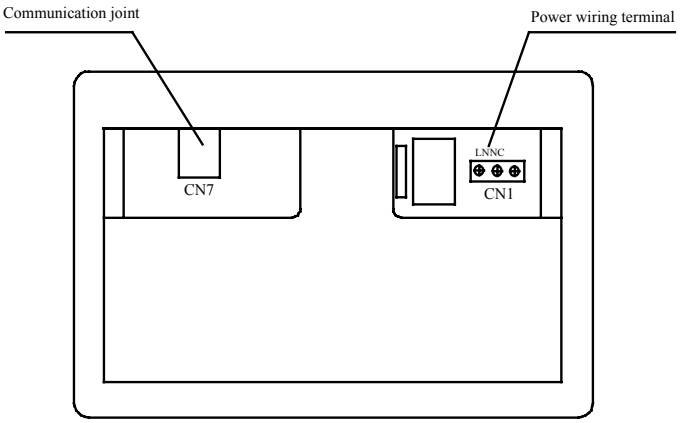


Fig.7.2.4.5

4) Divide the centralized controller into two parts from the buckle as shown in the folliwng figure------- upper cabinet and lower cabinet

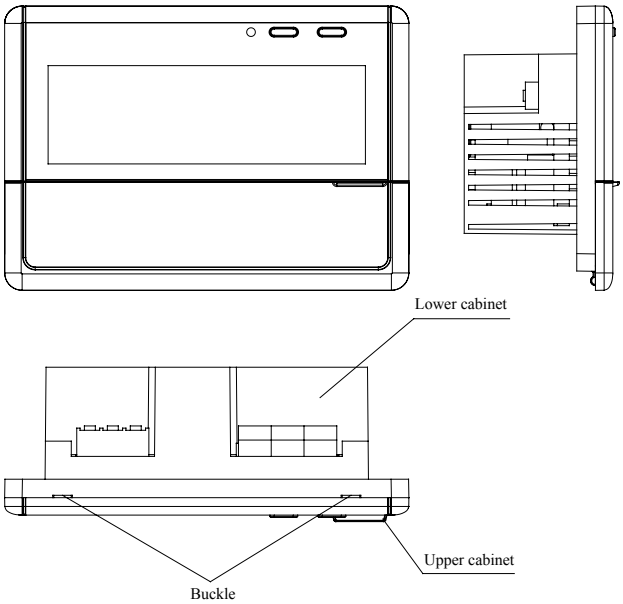


Fig.7.2.4.6

5) Connect the electric box cover and lower cabinet with screws according to the following figure.

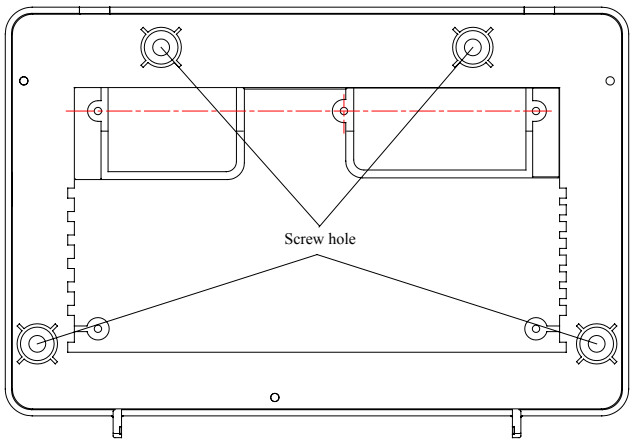


Fig.7.2.4.7

6) Re-assemble the upper cabinet and debugging can begin after this.

7.2.5 Connection Between Controller and Unit

**Communication network**

The following is a brief sketch of communication net of multi variable units:

7.2.6 Connection between centralized controller and communication module

Connection of them is shown in figure 6.2.5.1

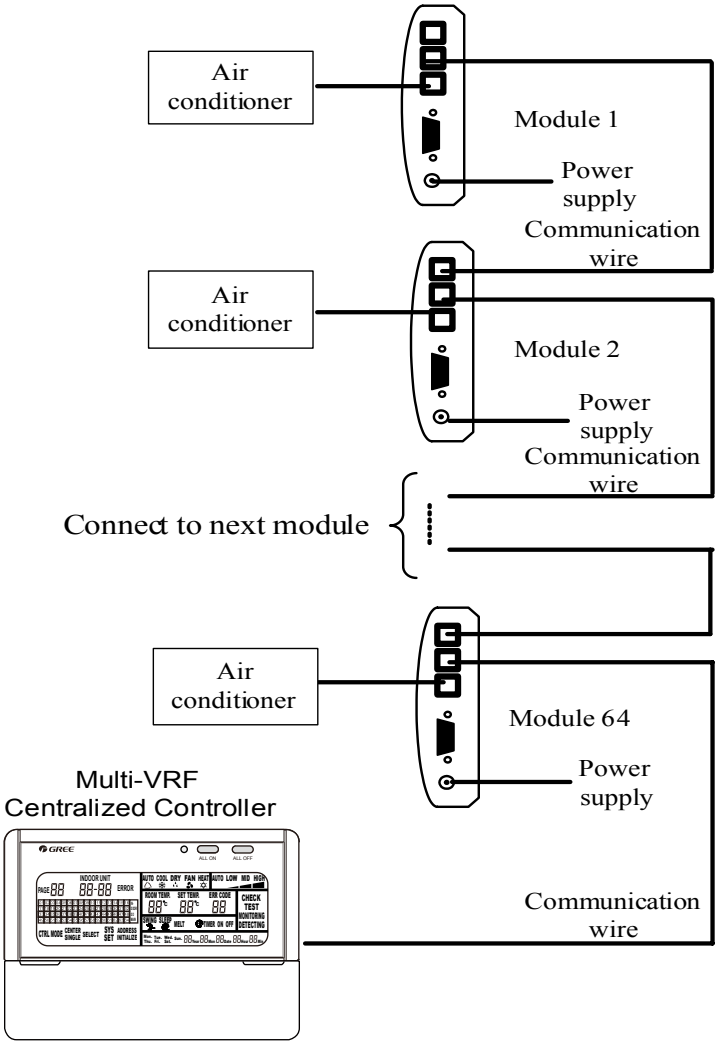


Fig.7.2.6.1 Skecth map of connection between centralized controller and communication module

**Note:**

1 ) Communication module's address can be set from 1 to 64. In order to avoid communication malfunction, addresses can not be the same.

2 ) The communication wire of communication modules or centralized controller shall be equipped according to the distance in the project.

3 ) Gree provides a piece of 2-core communication wire of 1m (the user shall extend the wire according to actual condition).

4 ) The centralized controller and the communication module are connected together through a communication line with a crystal connector at both ends. Close to the controller, a magnetic ring is needed on the communication line and is approximately 10cm away from the crystal connector after wrapped two circles by the communication line. During the installation, the magnetic ring should be put inside the electric control box after the crystal connector is connected with the smart zone controller. See the following figure for the connection manner and location.

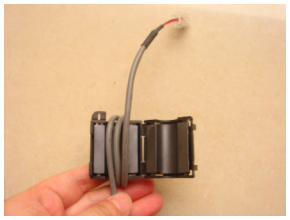

Fig.7.2.6.2 Connection Manner of Crystal Connector, Communication Line and Magnetic Ring

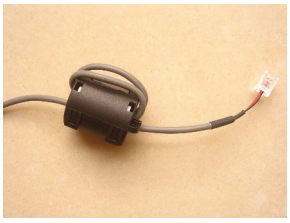

Fig.7.2.6.3 Connection Location of Crystal Connector, Communication Line and Magnetic Ring

After completion of installing centralized controller and matched communication modules, the technician shall set address and perform debugging of the communication modules to ensure normal communication.

7.2.7 Debugging

In order to ensure normal operation of the centralized controller, the address of communication module shall be set after installation work. (Refer to Communcation Module Instruction for details.) Fill in the Installation Table (refer to table 3)

7.2.7.1 Address setting of communication module

Set the address of communication module by the DIP switch. (Before operating DIP switch, cut off the power supply of communication module.)

The DIP switch for communication module:

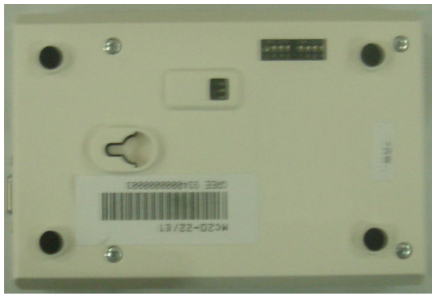

Fig.7.2.7.1 DIP switch

1) DIP2 setting

Dial all the rods to ON (means 0), as shown in Fig.6.2.6.2

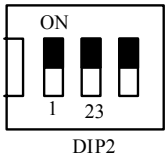


| Code list from 1 to 7 | | | |
|---|---|---|---|
| 1 | 2 | 3 | Value |
| 0 | 0 | 0 | 0 |
| 1 | 0 | 0 | 1 |
| 0 | 1 | 0 | 2 |
| 1 | 1 | 0 | 3 |
| 0 | 0 | 1 | 4 |
| 1 | 0 | 1 | 5 |
| 0 | 1 | 1 | 6 |
| 1 | 1 | 1 | 7 |

Fig.7.2.7.2 DIP2 setting

2) DIP1 setting

The 8-bit DIP switch in the communication module is for Modbus equipment address setting. It is integrated by SA2 and SA3 on PCB, but marked by DIP1. Dialing to ON means 0, and dialing to number end means 1. The address setting range is 1-64 (communication module address).

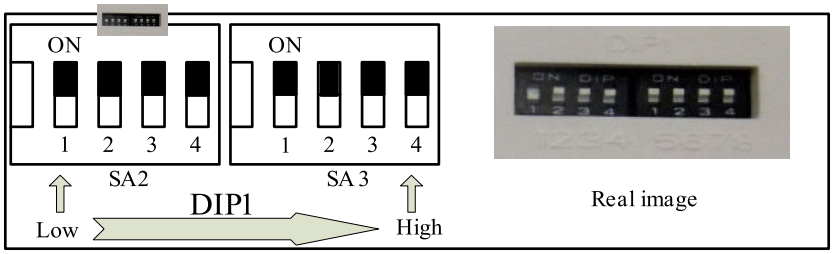


Fig. 7.2.7.3 DIP1 setting

(1) Graphic example for setting of address 11

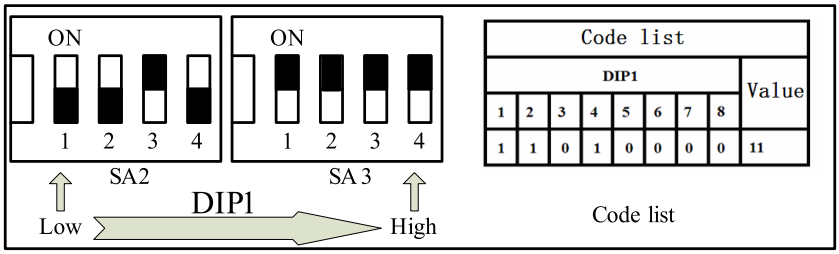


Fig. 7.2.7.4 Address 11

(2) Graphic example for setting of address 43

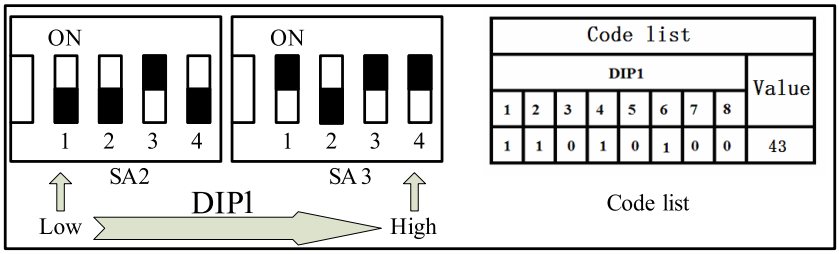


Fig. 7.2.7.5 Address 43

7.2.7.2 Debugging

After address setting of communication module, check if the setting is correct through the region no. on the centralized controller. For example, the address is set to “01”, the centralized shall display region no. “01”. If the region no.“01” is not displayed, it proves that the setting is incorrect. You should reset the address no. according to the Comnunciation Module Instruction and DIP table.

After normal communication between centralized controller and communication module, an Installation Table shall be filled for check of information about each indoor unt. If the quantity of indoor units by check is inconsistent with that of the installed indoor units, address setting the communication module and connection of the communication wire shall be checked again.

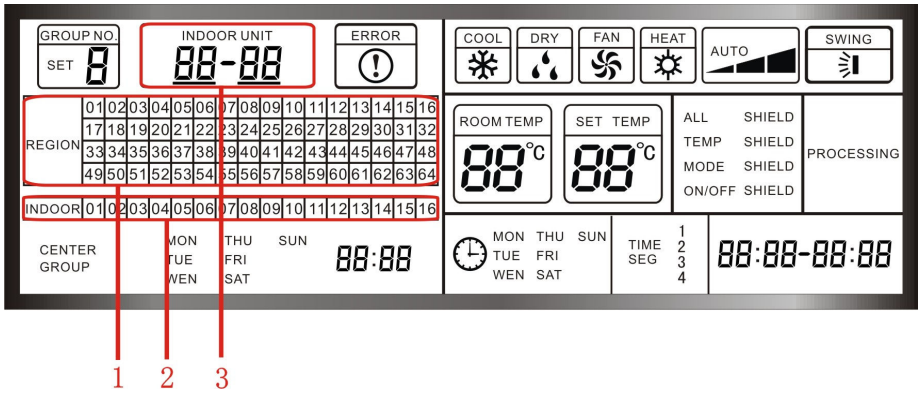


Fig. 7.2.7.6

Installation Table

Table 3 Installation Table

| Region No. | Indoor unit no. | Present indoor unit no. | Indoor unit location |
|---|---|---|---|
| 08 | 03 | 08-03 | No.3 indoor unit in Room B Floor A |

**Note:**

1 ) Region no. indicates online region no.1-64, displayed by the centralized controller.
2 ) Indoor unit no. indicates online indoor unit no., 1-16, displayed by centralized controller.
3 ) Present indoor unit no. indicates present indoor unit no. displayed by centralized controller.
4 ) Indoor unit location indicates actual location of centralized controller, which is expressed by No.___ indoor unit, Room____, Floor _____.

7.2.8 Attachment

Error Code List:

Error code list of GMV VRF

| Error Code | Malfunction |
|---|---|
| E1 | High pressure protection of compressor |
| E2 | Antifreezing protection of indoor unit |
| E3 | Low pressure protection of compressor |
| E4 | Discharge temperature protection of compressor |
| E5 | Overcurrent protection, overload protection of compressor, drive malfunction |
| E6 | Communication malfunction |
| E7 | Modes conflict |
| E8 | Indoor fan motor protection |
| E9 | Water overflow protection (cassette type unit) |
| EH | E-heater protection |
| F0 | Ambient temperature sensor malfunction of indoor unit |
| F1 | Malfunction of coil pipe inlet sensor of indoor unit |
| F2 | Malfunction of coil pipe intermediate sensor of indoor unit |
| F3 | Malfunction of coil pipe outlet sensor of indoor unit |
| F4 | Ambient temperature sensor malfunction of outdoor unit |
| F5 | Malfunction of coil pipe inlet sensor of outdoor unit |
| F6 | Malfunction of coil pipe intermediate sensor of outdoor unit |
| F7 | Malfunction of coil pipe outlet sensor of outdoor unit |
| F8 | Malfunction of discharge temperature sensor 1(fixed) |
| F9 | Malfunction of discharge temperature sensor 2 (digital) |
| FA | Malfunction of oil temperature sensor 1(fixed) |
| Fb | Malfunction of oil temperature sensor 2 (digital) |
| Fc | High pressure sensor malfunction |
| Fd | Low pressure sensor malfunction |
| H6 | PG Motor Stalling Protection |

DIP table of communication module

DIP table of communication module

| DIP1 | | | | | | | | Address value | DIP1 | | | | | | | | Address value |
|---|---|---|---|---|---|---|---|---|---|---|---|---|---|---|---|---|---|
| 1 | 2 | 3 | 4 | 5 | 6 | 7 | 8 | | 1 | 2 | 3 | 4 | 5 | 6 | 7 | 8 | |
| 1 | 0 | 0 | 0 | 0 | 0 | 0 | 0 | 1 | 1 | 0 | 0 | 0 | 0 | 1 | 0 | 0 | 33 |
| 0 | 1 | 0 | 0 | 0 | 0 | 0 | 0 | 2 | 0 | 1 | 0 | 0 | 0 | 1 | 0 | 0 | 34 |
| 1 | 1 | 0 | 0 | 0 | 0 | 0 | 0 | 3 | 1 | 1 | 0 | 0 | 0 | 1 | 0 | 0 | 35 |
| 0 | 0 | 1 | 0 | 0 | 0 | 0 | 0 | 4 | 0 | 0 | 1 | 0 | 0 | 1 | 0 | 0 | 36 |
| 1 | 0 | 1 | 0 | 0 | 0 | 0 | 0 | 5 | 1 | 0 | 1 | 0 | 0 | 1 | 0 | 0 | 37 |
| 0 | 1 | 1 | 0 | 0 | 0 | 0 | 0 | 6 | 0 | 1 | 1 | 0 | 0 | 1 | 0 | 0 | 38 |
| 1 | 1 | 1 | 0 | 0 | 0 | 0 | 0 | 7 | 1 | 1 | 1 | 0 | 0 | 1 | 0 | 0 | 39 |
| 0 | 0 | 0 | 1 | 0 | 0 | 0 | 0 | 8 | 0 | 0 | 0 | 1 | 0 | 1 | 0 | 0 | 40 |
| 1 | 0 | 0 | 1 | 0 | 0 | 0 | 0 | 9 | 1 | 0 | 0 | 1 | 0 | 1 | 0 | 0 | 41 |
| 0 | 1 | 0 | 1 | 0 | 0 | 0 | 0 | 10 | 0 | 1 | 0 | 1 | 0 | 1 | 0 | 0 | 42 |
| 1 | 1 | 0 | 1 | 0 | 0 | 0 | 0 | 11 | 1 | 1 | 0 | 1 | 0 | 1 | 0 | 0 | 43 |
| 0 | 0 | 1 | 1 | 0 | 0 | 0 | 0 | 12 | 0 | 0 | 1 | 1 | 0 | 1 | 0 | 0 | 44 |
| 1 | 0 | 1 | 1 | 0 | 0 | 0 | 0 | 13 | 1 | 0 | 1 | 1 | 0 | 1 | 0 | 0 | 45 |
| 0 | 1 | 1 | 1 | 0 | 0 | 0 | 0 | 14 | 0 | 1 | 1 | 1 | 0 | 1 | 0 | 0 | 46 |
| 1 | 1 | 1 | 1 | 0 | 0 | 0 | 0 | 15 | 1 | 1 | 1 | 1 | 0 | 1 | 0 | 0 | 47 |
| 0 | 0 | 0 | 0 | 1 | 0 | 0 | 0 | 16 | 0 | 0 | 0 | 0 | 1 | 1 | 0 | 0 | 48 |
| 1 | 0 | 0 | 0 | 1 | 0 | 0 | 0 | 17 | 1 | 0 | 0 | 0 | 1 | 1 | 0 | 0 | 49 |
| 0 | 1 | 0 | 0 | 1 | 0 | 0 | 0 | 18 | 0 | 1 | 0 | 0 | 1 | 1 | 0 | 0 | 50 |
| 1 | 1 | 0 | 0 | 1 | 0 | 0 | 0 | 19 | 1 | 1 | 0 | 0 | 1 | 1 | 0 | 0 | 51 |
| 0 | 0 | 1 | 0 | 1 | 0 | 0 | 0 | 20 | 0 | 0 | 1 | 0 | 1 | 1 | 0 | 0 | 52 |
| 1 | 0 | 1 | 0 | 1 | 0 | 0 | 0 | 21 | 1 | 0 | 1 | 0 | 1 | 1 | 0 | 0 | 53 |
| 0 | 1 | 1 | 0 | 1 | 0 | 0 | 0 | 22 | 0 | 1 | 1 | 0 | 1 | 1 | 0 | 0 | 54 |
| 1 | 1 | 1 | 0 | 1 | 0 | 0 | 0 | 23 | 1 | 1 | 1 | 0 | 1 | 1 | 0 | 0 | 55 |
| 0 | 0 | 0 | 1 | 1 | 0 | 0 | 0 | 24 | 0 | 0 | 0 | 1 | 1 | 1 | 0 | 0 | 56 |
| 1 | 0 | 0 | 1 | 1 | 0 | 0 | 0 | 25 | 1 | 0 | 0 | 1 | 1 | 1 | 0 | 0 | 57 |
| 0 | 1 | 0 | 1 | 1 | 0 | 0 | 0 | 26 | 0 | 1 | 0 | 1 | 1 | 1 | 0 | 0 | 58 |
| 1 | 1 | 0 | 1 | 1 | 0 | 0 | 0 | 27 | 1 | 1 | 0 | 1 | 1 | 1 | 0 | 0 | 59 |
| 0 | 0 | 1 | 1 | 1 | 0 | 0 | 0 | 28 | 0 | 0 | 1 | 1 | 1 | 1 | 0 | 0 | 60 |
| 1 | 0 | 1 | 1 | 1 | 0 | 0 | 0 | 29 | 1 | 0 | 1 | 1 | 1 | 1 | 0 | 0 | 61 |
| 0 | 1 | 1 | 1 | 1 | 0 | 0 | 0 | 30 | 0 | 1 | 1 | 1 | 1 | 1 | 0 | 0 | 62 |
| 1 | 1 | 1 | 1 | 1 | 0 | 0 | 0 | 31 | 1 | 1 | 1 | 1 | 1 | 1 | 0 | 0 | 63 |
| 0 | 0 | 0 | 0 | 0 | 1 | 0 | 0 | 32 | 0 | 0 | 0 | 0 | 0 | 0 | 1 | 0 | 64 |

# 8 MONITORING SOFTWARE

## 8.1 Function

As the development and improvement of manufacturing technology and in order to solve the problems of complex distribution of the central AC in the buildings and difficult control and maintenance of them, an platform easy and reliable to operate must be provided to the users for daily management and maintenance. So this long-distance monitoring system combining electronic communication and computer technologies is developed to collect the running state of the units and to monitor and control the units from a long distance. Its structure is as follow:

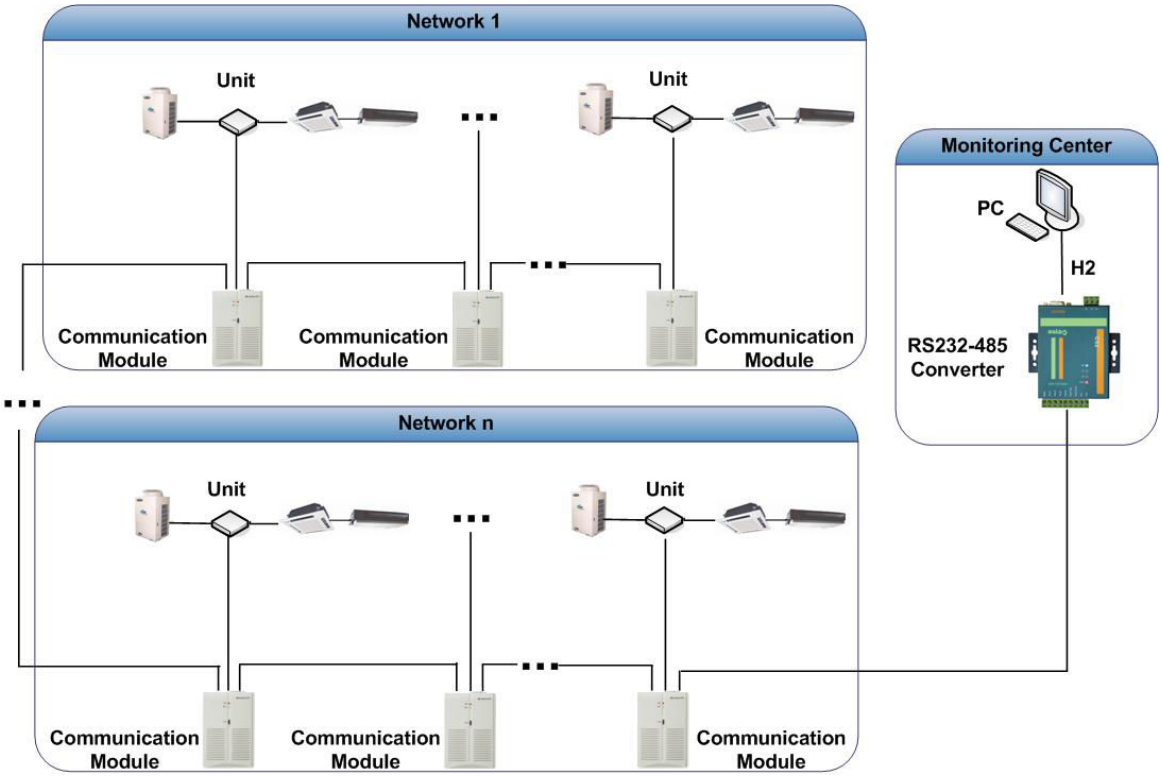


## 8.2 Connection Between the Computer and the Unit

8.2.1 Notice

◆ The address code of the communication modules should not be conflicted in one project.

◆ Optoelectronic Isolated Repeater: One every 800m of communication distance equipped with one and one every 30 communication modules equipped with one.

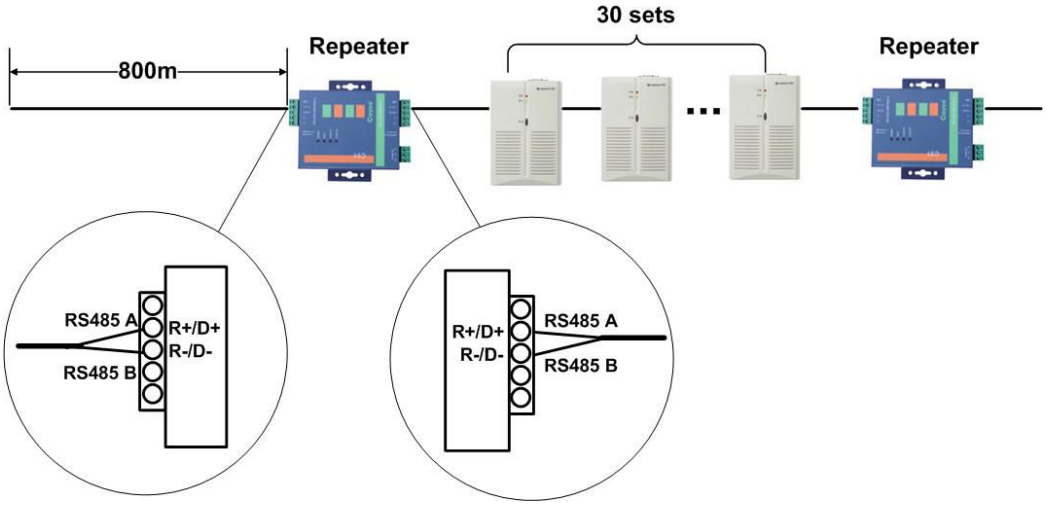

◆ The communication cable and heavy-current wire should be separated and the distance between them can not be below 15cm

◆ Line A and line B of Bus 485 should respectively correspond with line A and line B.

◆ Crystal head(crystal head buckle is downwards)

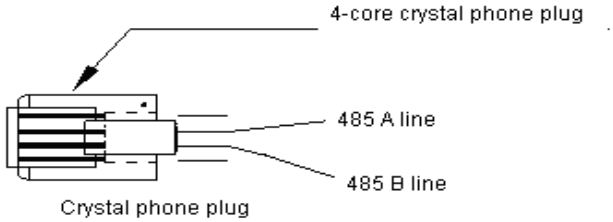


8.2.2 Wiring Diagram

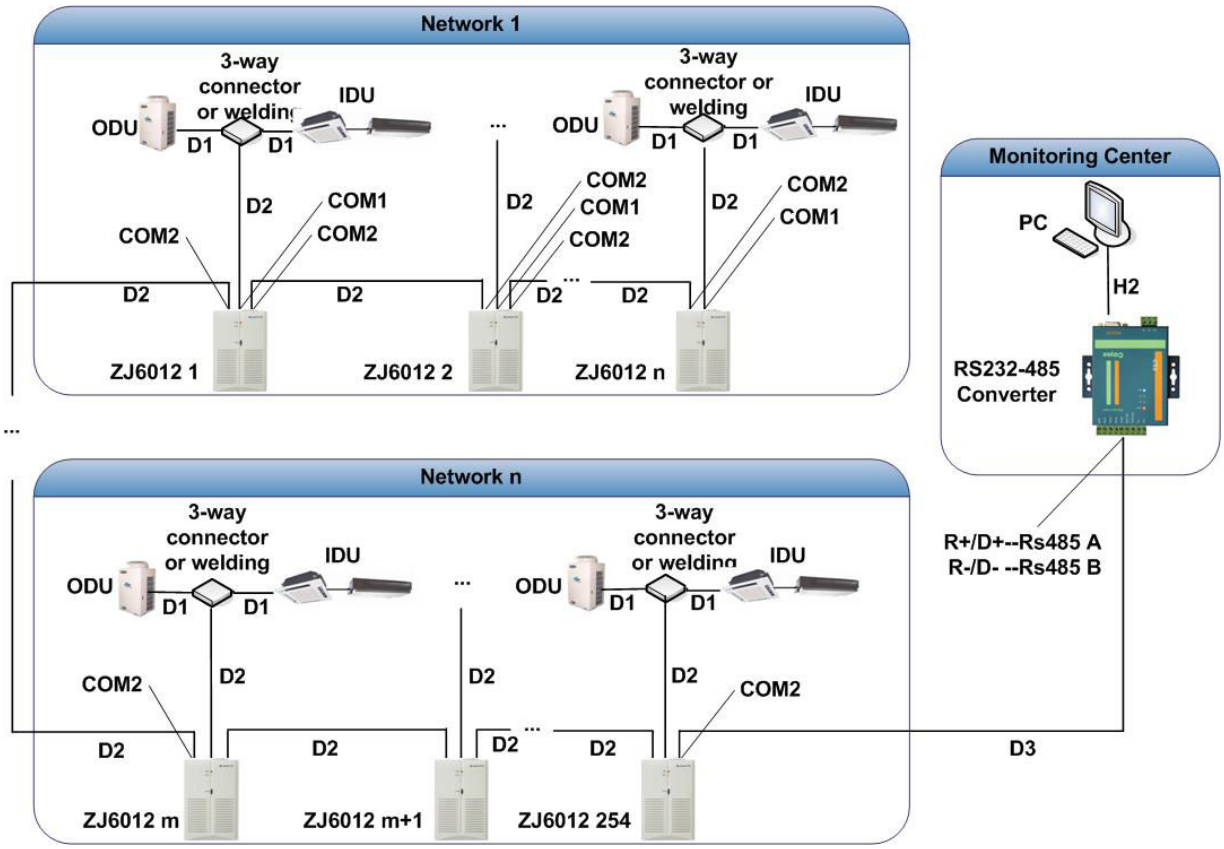


Description of above communication cables

| Cable | Description |
|---|---|
| D1 | crystal head and the other end is XH 4-core pin connector(2-core Type-V twisted pair wire) |
| D2 | both crystal head(Standard parts) |
| D3 | crystal head and the other end connects of it connects with wiring terminal of converter. (2-core Type-V twisted pair wire) |
| H2 | both 9-core head (Standard parts) |

### 8.3 Hardware

8.3.1 Introduction to Main Devices

8.3.1.1 R232-R485 Optoelectronic Isolated Converter (standard parts)

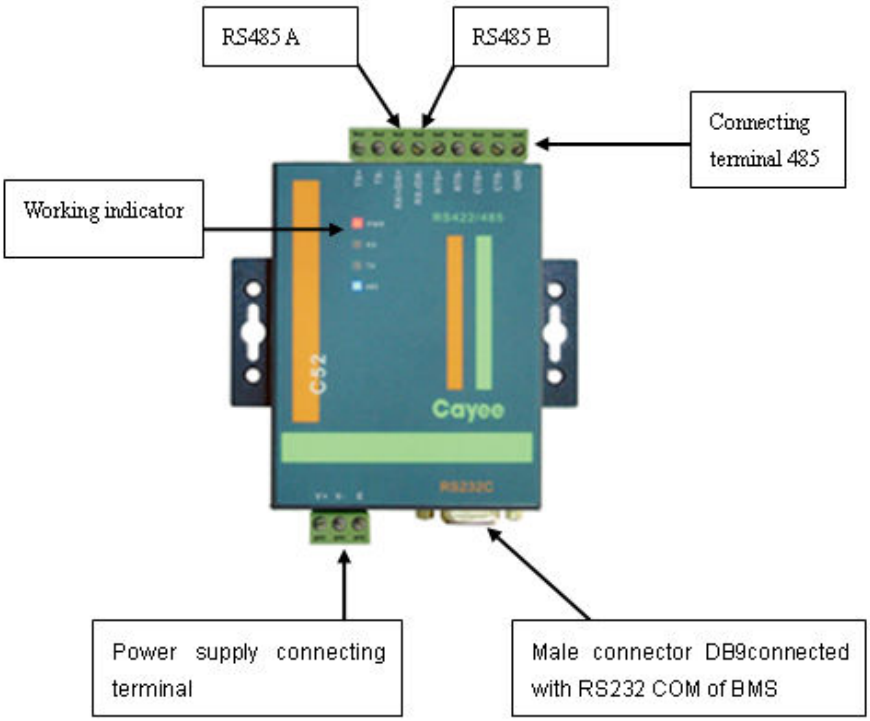


1) Function Introduction:

R232-R485 optoelectronic Isolated converter is used to convert the signal 232 of PC COM and signal of bus 485.

2) Dimension

| Description | L(mm) | L(mm) | L(mm) |
|---|---|---|---|
| optoelectronic isolated converter | 94 | 72 | 23 |

3) Installation Dimension

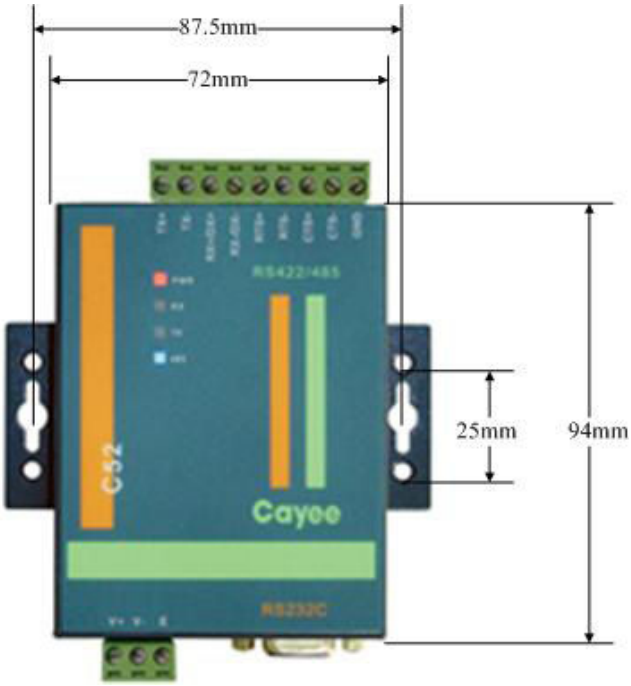

4) Installation Criteria:

◆ It must be installed indoors to avoid knock, insolation or rainwater and is better to be put in the monitoring room.

◆ This device must be the original one in the factory. Never self-buy the models for replacement.

◆ 220-V AC socket must be installed for independent power supply.

◆ Power supply specification: 12~30VDC 800mA

8.3.2 Optoelectronic Isolated Repeater(optional parts)

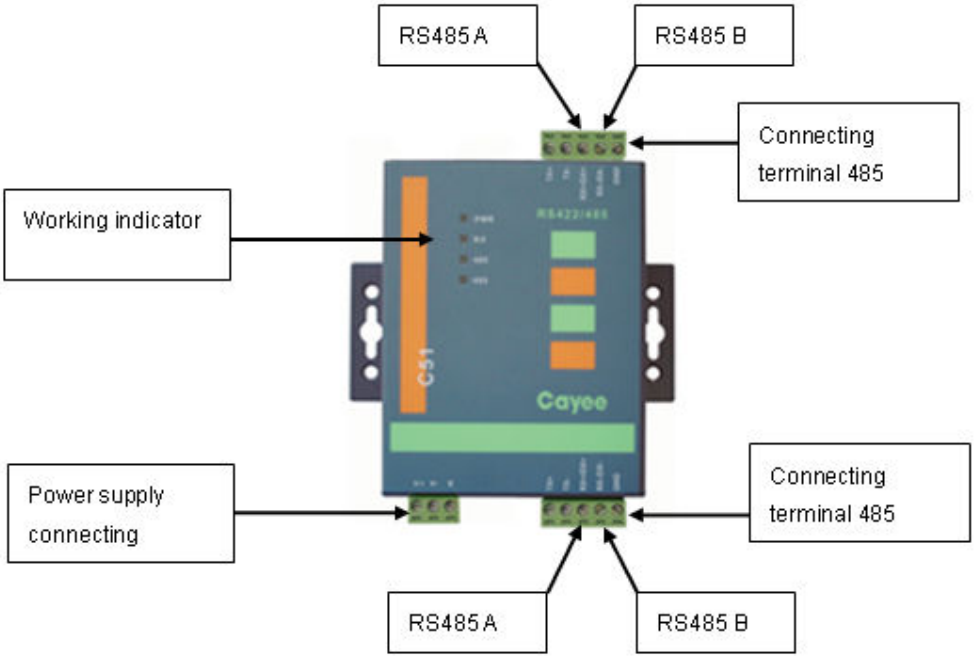


1) Function Introduction:

Optoelectronic Isolated repeater is mainly used to collect increase of communication distance and nodes when the quantity of communication modules is above 30 or communication distance is above 800m.Refer to Project and Installation section for details.

2) Dimension

| Description | L(mm) | W(mm) | H(mm) |
|---|---|---|---|
| Optoelectronic Isolated Repeater | 94 | 72 | 23 |

3) Installation Dimension

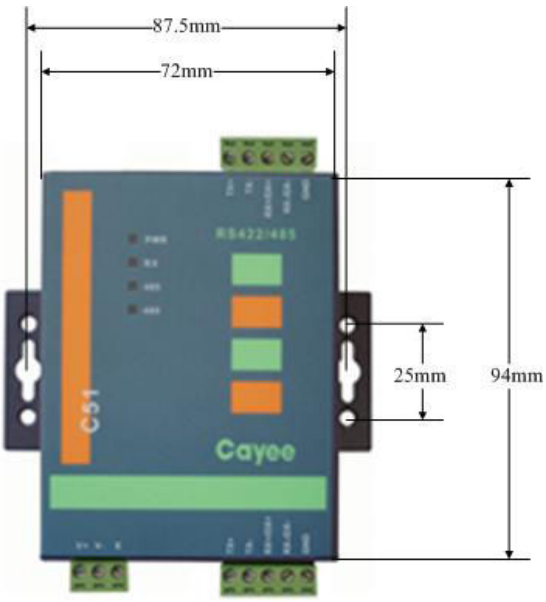

4) Installation Criteria:

◆ It must be installed indoors to avoid knock, insolation or rainwater and is better to be put in centralized control cabinet

◆ This device must be the original one in the factory. Never self-buy the models for replacement.

◆ 220-V AC socket must be installed for independent power supply.

◆ 12~30VDC 800mA Power supply specification: 12~30VDC 800mA

8.3.3 Communication Module (standard parts)

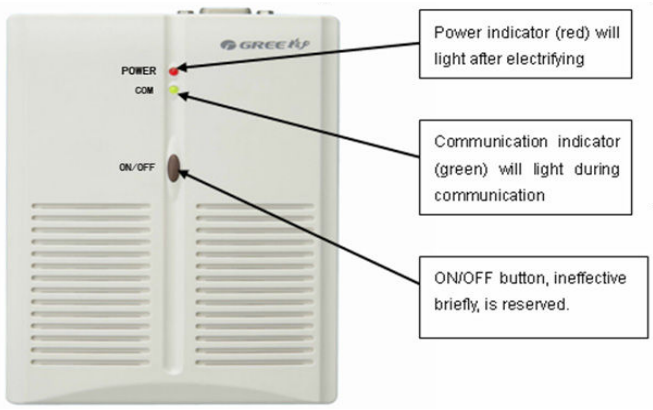


1) Function Introduction

Communication module is used for conversion and transfer of signal of PC and air conditioner during the communication of them, making the role of communication controller. Refer to User Instruction to Communication Module for details.

2) Dimension:

| Description | L(mm) | W(mm) | H(mm) |
|---|---|---|---|
| Communication module | 150 | 102 | 30 |

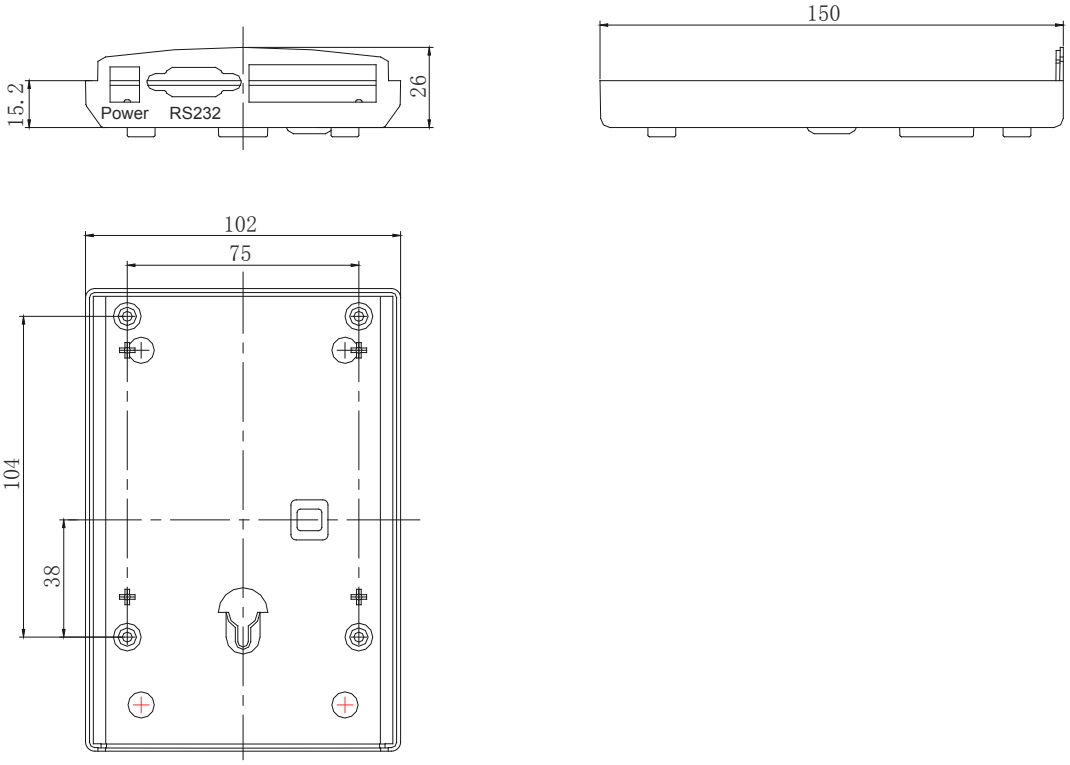

3) Installation Dimension:

| Description | Distance to top side(mm) | Diameter(mm) |
|---|---|---|
| Hanging Hole | 35 | 5 |

4) Use Instruction to Communication Module

The Sketch Map of COM, as shown below:

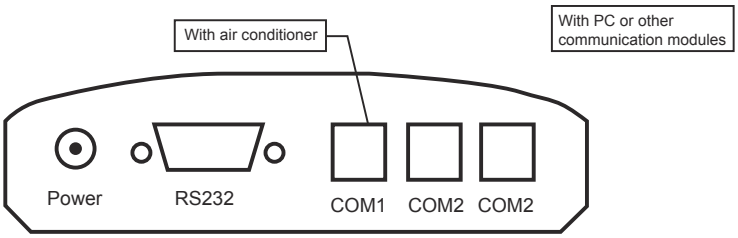


Use Instruction

Please check the user manual of communication module for details information.

5) Installation Criteria of Communication Module:

◆ Ensure the specification of power adapter to avoid malfunction or damage to the communication module.

◆ Ensure unique DIP address of each communication module in the project to avoid malfunction.

◆ Ensure communication cable connects with correct COM to avoid malfunction.

◆ The communication modules should be put in centralized control cabinet together to avoid direct sunlight or high temperature and wet environment.

◆ Power transformer specification: input AC200V~50HZ and output DC9V~800mA

8.3.4 Centralized Control Cabinet (user provided parts)

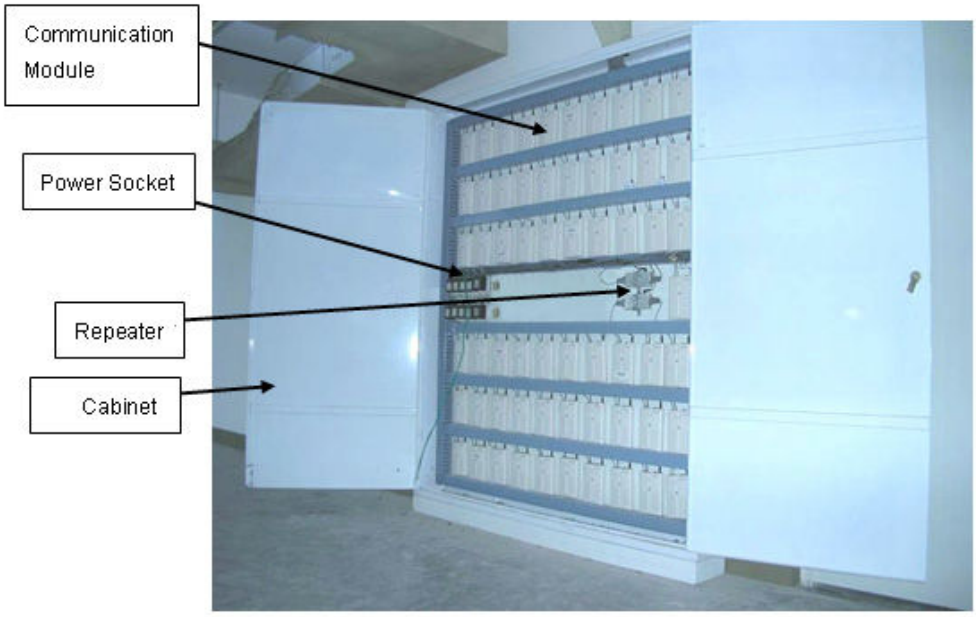


1) Function Instruction:

It can put the communication modules together for convenient centralized management and reliable operation.

2) Dimension:

The following dimension is for reference. The cabinet is designed according to 10 communication modules into. If more modules are needed, the cabinet should be designed once again. The internal structure should accord to actual state.

The external dimension of the cabinet (Unit: mm)

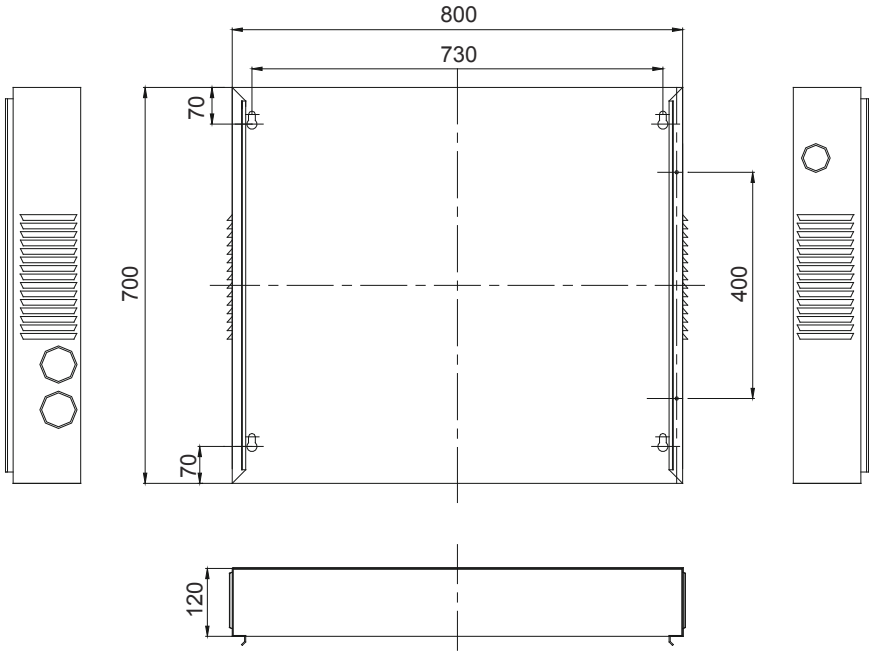


3) Installation Criteria:

◆ The dimension of the cabinet should be designed according to quantity , arrangement and put position of the communication modules before make of it.

◆ Independent power supply for each communication module is needed, so enough 220v AC sockets should be installed in the cabinet.

◆ The communication cable and heavy-current wire should be separated for the distance above 15cm.

◆ The cabinet should be put indoors and locked to avoid insolation and rainwater or contact of non-manager.

8.3.5 3-way Phone Connector (user provided parts)

**Note: Lines without 3-way telephone connector can be connected by welding and protected with insulating tape to avoid oxidization and short circuit.**

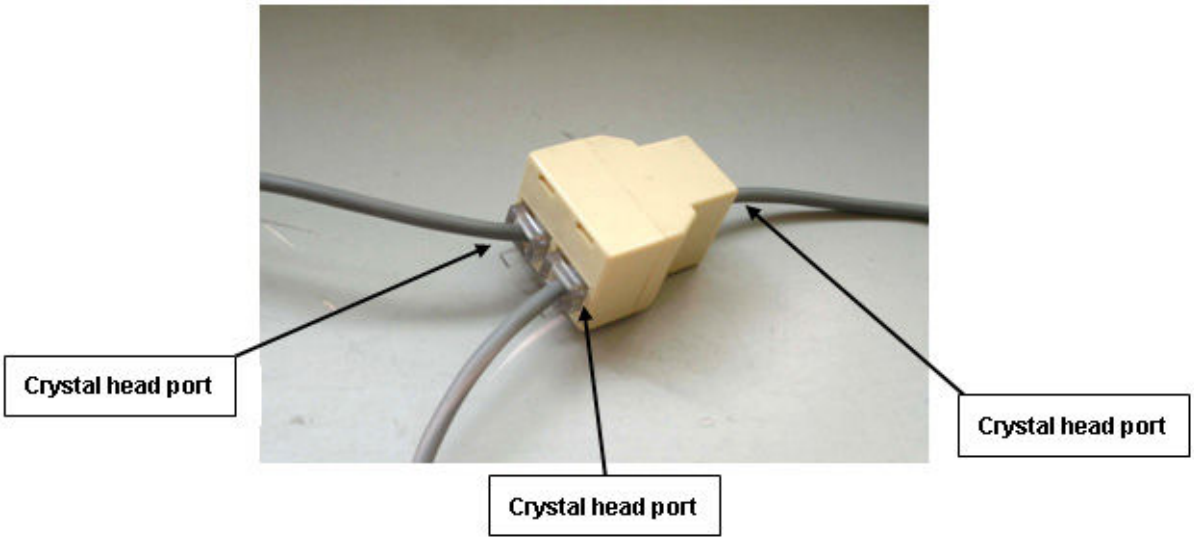

1) Function Instruction: Common 3-way phone connector is applied to connect 3 pieces of communication cable.

Dimension :

| Description | L(mm) | W(mm) | H(mm) |
|---|---|---|---|
| 3-way connector | 33 | 27 | 21 |

2) Installation Criteria:

◆ Avoid knock, insolation or rainwater.

◆ Ensure tightness of each bayonet without load.

◆ Perform conduction test after installation. Replace the ones of poor contact.

◆ The welding method is better than 3-way connector.

◆ After the connection of communication cables with 3-way connector, it must be fixed by insulating tape to avoid loose and poor contact of crystal head.

## 9 DETECTION CONTROL BOARD

### 9.1 Gate-control Function

This detection control board is only suitable for Gree multi-variable (GMV) indoor unit with gate-control function. The AC will run after plugging in gate-control card and stop running after plugging out the card. Upon plugging out the card to stop the unit, the running states of the unit will be memorized. After plugging in the card, the unit will be under standby state or resume running according to settings. The AC will run when the customer plugs in the card and automatically stop when he plugs out the card, which ensures unit off after leaving of persons and saves energy.

Fig.1 is about simple sketch for communication network of detection control board for GMV series.

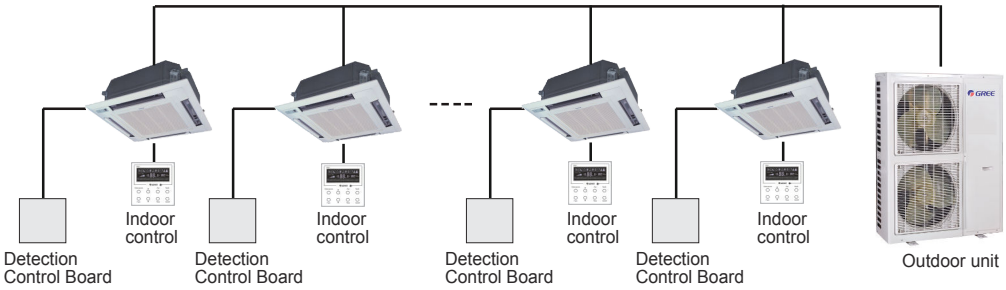


Fig.1 Communication Network of Detection Control Board for GMV series

### 9.2 Working Process of Gate Control

1) If the gate-control card is not plugged in after powering on the complete unit, the indoor unit will be in the state without gate-control function and can be operated by remote controller or buttons on it.

2) Powering on the AC and plugging in the card, the unit will be in the state with gate-control function after 5-second detection. The present running state of the AC won't be affected (the unit on/off state will be kept) after plugging in the card. If plugging out the card, the AC will automatically stop after 5-second detection.

Once plugging in the card, indoor unit will be considered as the one with gate-control function, which can be canceled only after powering off and then powering on the unit.

### 9.3 Detection Control Board Interface Sketch is shown in Fig.2:

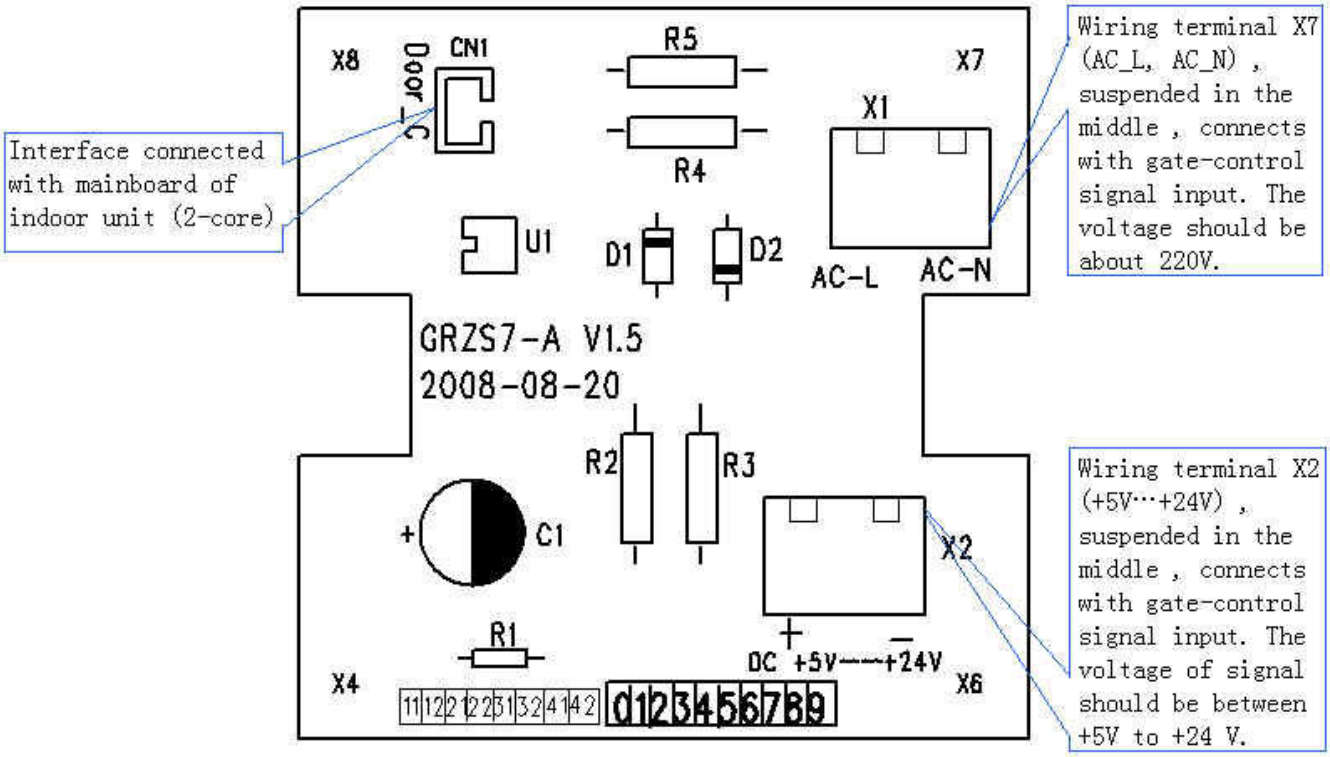


Fig2: Detection Control Board Interface Sketch

The gate-control function can be realized after the detective interface of detection control board connects with interface of gate-control card and signal interface of it connects with the mainboard.

### 9.4 Products Parameters

Model: MK03 gate controller
Working Voltage: AC 220-240V, 50HZ or DC +5V-+24V
Power: 1W
Working temperature: -10~48℃

### 9.5 Installation of Detection Control Board

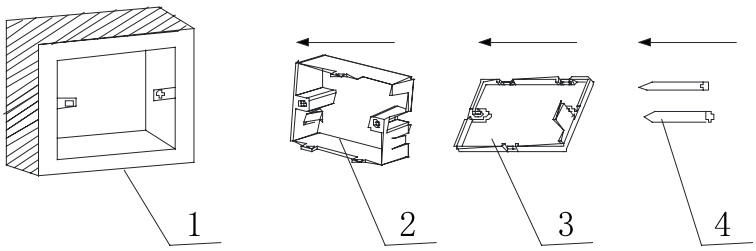


Fig. 3 Installation Sketch of Detection Control Board

| No. | 1 | 2 | 3 | 4 |
|---|---|---|---|---|
| Description | Base box of socket installed in the wall , a hole with ( L×W×D)100mm×100mm×50mm | Bottom plate of detection control board | Front panel of detection control board | Screw M4X25 |

**Note: Detection control board with (L×W×H) 73.5mm×73.5mm×33.0mm**

Fig.3 is about installation process of detection control board. The following items should be attended.

1. Installation must be performed by professionals. Either 220-240V or DC 5-24V is ok.

2. Cut off the power of heavy current wire covered in the mounting hole in the wall before installation. Never perform the installation with electricity.

3. Press the bottom plate of the detection control board on the wall, and then make it and front panel of detection control board together.

4. At last fix the bottom plate and front panel of detection control board together with screw ST2.2X6.5.

5. There shouldn't be any large-power electric appliance and firming base nearby to avoid interference source.

6. Avoid sunlight and rain and do not install it at wet space.

7. Do not install the unit at the place where there is corrosive gas, serious dust, salt fog and oil smoke or which is specially wet.

8. The detection control board must be installed at concealed place and far from water and fire.

# INSTALLATION

# INSTALLATION

## 1 PRECAUTIONS FOR INSTALLATION

### 1.1 Precautions for installation

Before installation, please ensure if the installing site, power ratings, possible operating range (pipe distance, height difference between indoor and outdoor unit, power voltage) and installing space are correct and suitable. The outdoor unit is general to all models according to its power.

◆ To ensure correct installation, please make sure to read the Safety Considerations thoroughly before starting the installation works.

◆ The considerations stated below are classified into ⚠ WARNING and ⚠ CAUTION. Those that might cause death or severe injury in case of wrong installation are identified in ⚠ WARNING. However, those that are stated in ⚠ CAUTION may also cause severe accidents sometimes. Therefore, both of them relate to important safety considerations and must be strictly followed.

◆ After completing the installation and test run and confirming that all are normal, please introduce to the client on how to use and repair the machine according to the Operating Instructions. Besides, please deliver the considerations herein to the clients together with the Operating Instructions, and ask them to keep properly.

⚠ **WARNING!**

◆ The installation shall be performed by the vendor or professional dealer from which you buy the machine. If you install by yourself, any improper installation might cause water leakage, electric shock or fire accident.

◆ The installation shall be done correctly according to installation instructions. Improper installation may cause water leakage, electric shock or fire.

◆ To install a large air-conditioning system in a small room, please make sure to take measures to prevent that the refrigerant will not exceed the limit concentration in case of leakage. For the measures to prevent the refrigerant from exceeding the limit concentration, please consult your dealer. If no proper measures, it might cause human suffocation in case of refrigerant leakage.

◆ Please install at a position that is strong enough to support the weight of machine. If the installing position is of low strength, the machine may drop down and thus cause human injury.

◆ Please carry out installation in accordance with the rules for preventing the typhoon or earthquake. The machine may tip over if the installation does not comply with the requirements.

◆ The electrical cabling shall be carried out by qualified electricians in accordance with the Safety Code for Electrical Equipment, relevant local rules and the installation instructions. Make sure to use the special-purpose circuit. If the power circuit capacity is low or the construction is improper, it might cause electric shock or fire accidents.

◆ Please use suitable cables and connect them securely. Please fix the terminal joints securely. The terminal connection shall not be affected due to any external force applied onto the cable. Improper connection and fixing may cause heating and fire accidents.

◆ Keep the cables in correct shape and prevent them from protruding upward. Please protect them securely with repair board. Improper installation may cause heating and fire accidents.

◆ When erecting or relocating the air conditioner, do not let any air enter into cooling circulation system except the specified refrigerant. If any air is mixed, abnormal high pressure will occur in the cooling circulation system, thus causing crack or human injury accidents.

During installation, please always use the attached parts or designated parts. Failure to use the designated parts may cause water leakage, electric shock, fire or refrigerant leakage.

⚠ **CAUTION:**

◆ Please earth securely. Do not connect the earth wires to gas pipe, water pipe, lightning rod or telephone line. Improper earthling might cause electric shock.

◆ Leakage circuit breaker must be installed at some place. No installation of leakage circuit breaker might cause electric shock.

◆ Do not install at a place where inflammable gas might leak. Gas leakage and despot around the

machine might cause fire accidents.

◆ To ensure correct drainage of water, the drainage hose shall be installed according to the installation instructions. Also the heat insulation shall be provided to avoid condensing.Improper installation of the pipe might result in water leakage and lead to possible wetting of the articles in the room.

### 1.2 Key Points of Installation

| Installation Procedures | | | Description and Acceptance Criteria |
|---|---|---|---|
| Material Selection and Equipment Inspection | | | The materials specified on the engineering drawing shall be purchased as specified (e.g. copper tube, thermal insulation tube, PVC pipe, power cables, air switch, etc);<br>The materials not specified on the engineering drawing shall be purchased according to the actual quantity of works (e.g. hanger frame, cable duct, etc);<br>Check if the outdoor unit, indoor unit, communication wires and accessories are complete. |
| Installation of indoor unit | Communication wire | Connection | The power cables shall be separated from communication wires at a least distance of 10cm.<br>To avoid breaking the communication wires, please do not use strong force.<br>For multiple units, please mark them properly.<br>Switch on indoor and outdoor unit, and ensure there is no display of “Communication Wire Error E6” |
| | | Address dial code | Each indoor unit under the same system has a unique address dial code.<br>The wired controller and its corresponding indoor unit have the same address dial code. |
| | Remote Control | | Select the remote control mode;<br>The centralized controller and communication module shall be installed free from the source of interference. |
| | Power cord | | The power cable must meet the specifications.<br>The indoor units under the same system must be arranged under unified power supply. |
| | Drainage hose | Installation | The PVC pipes must meet the specifications.<br>A specific gradient must be provided along the water flow direction.<br>Carry out water detection after installation.<br>Carry out thermal insulation to the drainage hose only after the water detection is accepted. |
| | | Thermal insulation | The thermal insulation tube must meet the specifications.<br>Seal between the thermal insulation pipes to avoid air entry. |
| | Installation of Air Duct (when with high static pressure duct-type unit) | | Design the length of air duct according to static pressure;<br>The return air inlet shall be optimally designed to avoid too small size. |
| Installation of connection pipes | Welding | | The copper tube must meet the specifications.<br>Ensure it is dry and clean inside the tube.<br>Make sure to charge nitrogen as required for protection when welding the tubes.<br>Please keep to the welding process and ensure the system free of leakage.<br>Add a dual-way filter on liquid pipe side.<br>For multiple systems, please mark them properly.<br>Carry out leakage detection under pressure after welding. |
| | Purge and make leakage detection under pressure | | Purge the system clean.<br>Keep the pressure for 24 hours<br>Except for the influence by temperature, it is deemed acceptable if pressure drop is within 0.02MPa. (With the temperature change by 1?, the pressure will change by approx. 0.01MPa). |
| | Thermal insulation | | The thermal insulation tube must meet the specifications.<br>Seal between the thermal insulation pipes to avoid air entry. |

| | |
|---|---|
| Installation of outdoor unit | Select the installing position correctly.<br>Build the foundation according to the anchor bolt position and the dimension of outdoor unit;<br>Build the damping device properly.<br>Avoid sharp knock when handling the outdoor unit. The inclination angle shall not be higher than 15° |
| Connection of indoor unit and outdoor unit | Tighten the nuts;<br>Provide proper protection to the outdoor connection pipe, communication wires and power supply. |
| Leakage detection under pressure | Keep the pressure for 24 hours. Except for the influence by temperature, it is deemed acceptable if pressure drop is within 0.02MPa. (With the temperature change by 1℃, the pressure will change by approx. 0.01MPa). |
| Vacuuming | Establish vacuum simultaneously in the gas pipe and liquid pipe;<br>The vacuuming time shall be long enough.<br>Put still for 1 hour after vacuuming. It is deemed acceptable if the pressure will not rise. |
| Add refrigerant | Add refrigerant according to the volume as specified on the engineering drawing. |
| Open the valve of outdoor unit | |
| Commissioning of complete unit | |

**Remarks:**

1) Described above are general working procedures. The procedures might vary with the site conditions.
2) For detailed installation rules, please see the description in each chapter.

## 2 FLOW CHART OF INSTALLATION

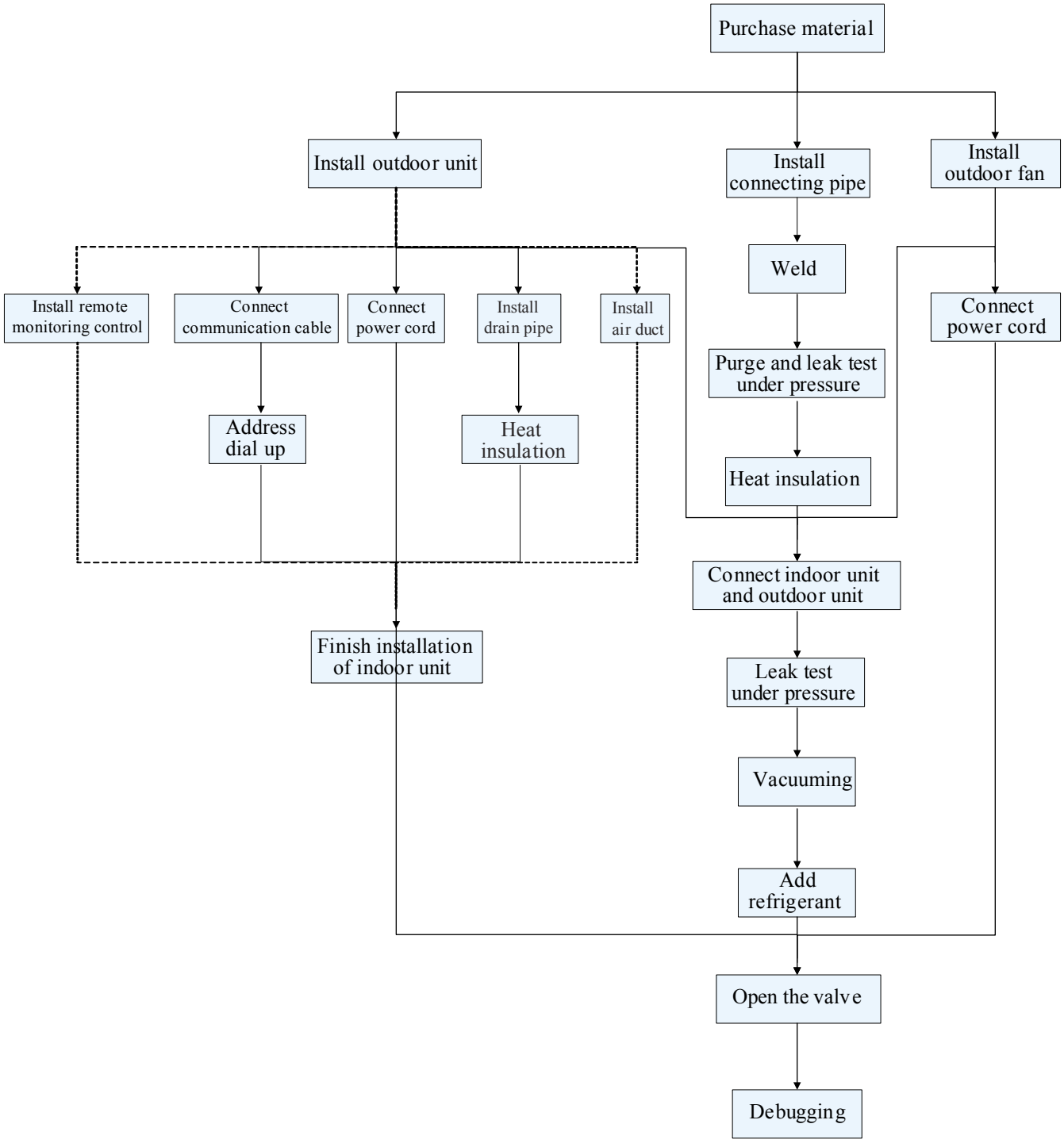

# 3 INSTALLATION OF OUTDOOR UNIT

## 3.1 Cautions for installation of side discharge outdoor unit

To ensure good operation of the air conditioner, the selection of installing position must be in accordance with the following principles:

◆ The outdoor unit shall be so installed that the air discharged out of the outdoor unit will not flow back and that enough space shall be maintained around the machine for repair.

◆ The installing position shall be in good ventilation, so that the machine can breathe and exhaust enough air.

◆ The installing position shall be strong enough to withstand the weight of outdoor unit and be able to isolate the sound and absorb the vibration;Also ensure that the outlet air and noise from the air conditioner will not affect the neighbors.

◆ The outdoor unit must be lifted by using the designated lift hole. During lifting, take care to protect the air conditioner and avoid knocking the metal parts, thus to prevent rusting in the future.

◆ Avoid direct sunshine as it might be.

◆ The installing position must be able to drain the rainwater and the water generated from defrosting.

◆ The installing position must ensure that the machine will not be buried in the snow or affected by the wastes or oil mist.

◆ To meet the noise and vibration requirements, the outdoor unit shall be installed by using rubber damping pad or spring damper.

◆ The installing dimension shall comply with the installation requirements in these instructions. The outdoor unit must be fixed at the installing position.

◆ The installation shall be done by specialist technicians.

## 3.2 Selection of Installation Site

◆ The place with no residual air
◆ The place where the accessories can be securely fixed
◆ The place where the air will not obstruct the water inlet pipe or water outlet pipe
◆ The place that goes beyond the heating range of other heat sources
◆ The place where the wastewater can be safely drained
◆ The place where the noise and hot air will not affect the neighbors
◆ The place where the snow will not be piled
◆ The place where the water outlet pipe will not be blown by strong wind

**Notes:**

Do not use guardrail on four sides. Leave 1m at least above the machine.

In case of short-circuit risk, please install an adaptor changeable in air direction.

To avoid short circuiting, please provide adequate suction space when multiple machines are to be installed.

In the region with snow, the machine shall be installed in a frame or beneath the snow guard, thus to prevent snow piling on the machine.

Do not install the equipment in a region where any inflammable gas might leak.

*The snow guard and other devices shall be designed and installed by the user.

### 3.3 Dimensions Data

Appearance of GMV(L)-Pd100W/NaB-K,GMV(L)- Pd 120W/NaB-K,GMV(L)- Pd 140W/NaB-K,GMV(L)- Pd 160W/NaB-K,GMV- Pd 140W/NaB-M,GMV- Pd 160W/NaB-M

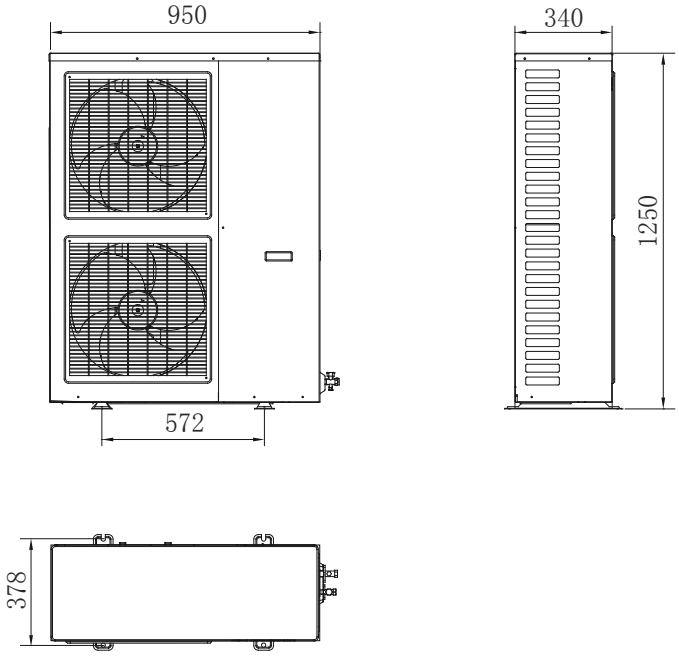


### 3.4 Installation space requirements

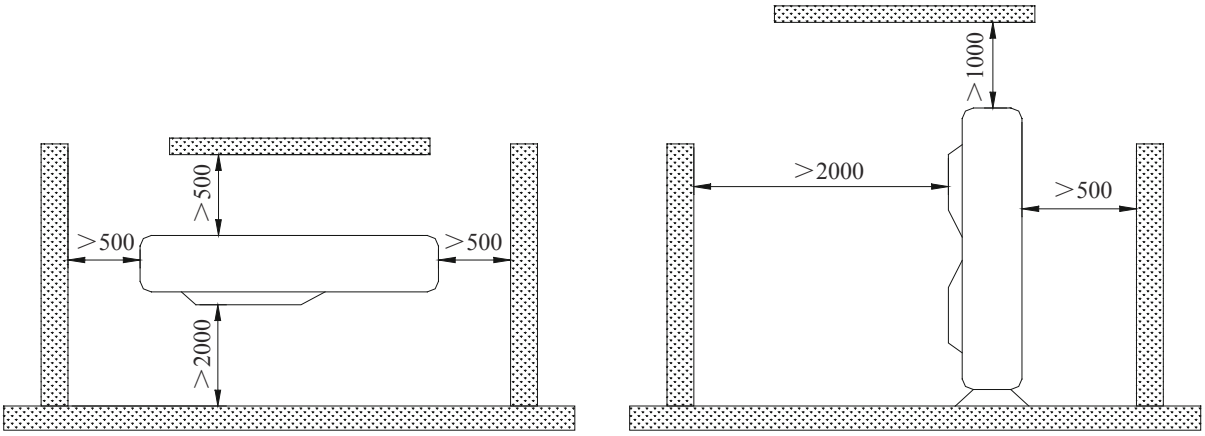

# 4 INSTALLATION REQUIREMENTS OF REFRIGERANT PIPING

## 4.1 Specification of refrigerant pipe

| R410a refrigerant system | | | |
|---|---|---|---|
| External Diameter(mm/inch) | Thickness(mm) | External Diameter(mm/inch) | Thickness(mm) |
| Φ6.35 | ≥0.8 | Φ22.2 | ≥1.5 |
| Φ9.52 | ≥0.8 | Φ25.4 | ≥1.5 |
| Φ12.7 | ≥1 | Φ28.6 | ≥1.5 |
| Φ15.9 | ≥1 | Φ34.9 | ≥1.5 |
| Φ19.05 | ≥1 | | |

## 4.2 Allowable Length and Height Differences of the Refrigerant Piping between the Indoor and Outdoor Units

| | | Allowable Value | Pipe |
|---|---|---|---|
| | | 100,120,140,160 | |
| Total Length (Actual Length) of Pipes | | 150m | L1+L2+L3+a+b++c+d |
| Length of farthest pipe (m) | Actual Length | 70m | L1+L2+L3+d |
| | Equivalent Length | 80m | |
| Length of pipe from the 1st manifold to the farthest indoor unit | | 25m | L2+L3+d |
| Height difference between indoor unit and outdoor unit | Outdoor unit on upper | 30m | —— |
| | Outdoor unit at lower | 25m | —— |
| Height difference between indoor unit and outdoor unit | | 10m | —— |

## 4.3 Size of Connection Pipe

4.3.1 The size of the pipe (main pipe) from the outdoor unit to the 1st manifold is same as the size of outdoor pipe.

Size of Outdoor Pipe

| Item \ Model | | | GMV-Pd100W/NaB-K | GMV-Pd120W/NaB-K | GMV-Pd140W/NaB-K<br>GMV-Pd140W/NaB-M | GMV-Pd160W/NaB-K<br>GMV-Pd160W/NaB-M |
|---|---|---|---|---|---|---|
| Connection Pipe | Liquid pipe | mm | Φ9.52 | Φ9.52 | Φ9.52 | Φ9.52 |
| | Gas pipe | mm | Φ15.9 | Φ15.9 | Φ15.9 | Φ19.05 |
| | Connection mode | | Flared connection | | | |

**Note: If the equivalent length of total t pipe exceeds 90m, the fitting pipe on gas side and liquid side shall be increased of one dimension.**

4.3.2 The size of the pipe (branch pipe) between the manifolds is selected according to the capacity of downstream indoor unit to be connected (See Table below). If exceeding the capacity of outdoor unit, the capacity of outdoor unit will prevail.If exceeding the capacity of outdoor unit, the capacity of outdoor unit will prevail.

| Total capacity of indoor units | Air pipe | Liquid pipe |
|---|---|---|
| C≤50 | Φ12.7 | Φ6.35 |
| 50<C≤140 | Φ15.9 | Φ9.52 |
| 140<C≤180 | Φ19.05 | Φ9.52 |

4.3.3 The size of the pipe (indoor pipe) between manifold and indoor unit is same as the size of indoor pipe (See Table below) (If the distance from the first branch to one indoor unit is over 30m, the air pipe and the liquid pipe from the 1st branch to this indoor unit shall be increased by one level).

| Capacity of Indoor Unit | Air pipe | Liquid pipe |
|---|---|---|
| 22,25,28 type | Φ9.52 | Φ6.35 |
| 32,36,40,45,50 type | Φ12.7 | Φ6.35 |
| 40,45,50 type | Φ12.7 | Φ9.52 |
| 56,63,71,80,90,100,112,125,140 type | Φ15.9 | Φ9.52 |

**Note: When the capacity of indoor unit is less than 5KW, if the distance from the nearest manifold to the indoor unit exceeds 10m, the fitting pipe on liquid side of the pipe shall be increased of one dimension.**

## 5 INSTALLATION OF REFRIGERANT PIPING

### 5.1 Flow Chart of Installation

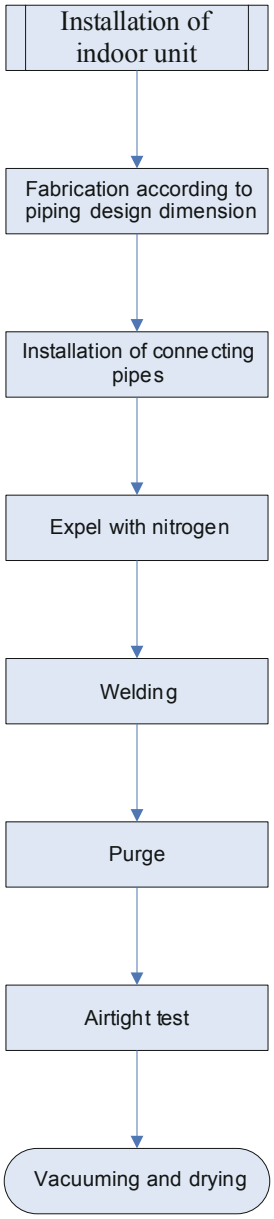

### 5.2 Three Principles of Refrigerant Piping Installation

Observe the three principles of refrigerant piping:

| | Key Factors | Measures to Avoid Failure |
|---|---|---|
| Dry | Invasion of outside water<br>Example: Rainwater, engineering water<br>Invasion of indoor condensate | Fabrication of fitting pipe → Purge → Vacuuming and drying |
| Clean | Formation of oxides inside the pipe during welding<br>Invasion of dust and foreign articles from outside | Expel with nitrogen 0.05~0.3Mpa<br>Fabrication of fitting pipe<br>→ Purge |
| Airtight | Incomplete welding<br>Leakage from flared port<br>Leakage from edge | Use suitable materials (copper tube, soldering bar)<br>Observe the basic welding procedures<br>Observe the basic operations for flaring of fitting pipe<br>Observe the basic inerfacting procedures<br>→ Airtight test |

### 5.3 Installation of Metal Embedded Pipe

◆ Work Order

Metal Embedding Diagram → Plotting → Installation of metal Embedded Parts

Plot the line on ground if possible and use laser to project it onto the roof. This is quick and correct.

◆ Advance Installation of Metal Embedded Parts

Please select according to local codes.

◆ Subsequent Installation of Expansion Bolts

In case that the metal embedded parts cannot be used due to design change, the expansion bolts may be used.

◆ Subsequent Installation of Expansion Bolts

The foot pedal shall be supported on three points if exceeding 2m.

The foot pedal must be fixed securely to the ladder.

Please do not work on the top of ladder.

### 5.4 Installation of Carriage of Refrigerant pipin

5.4.1 Fixing of horizontal pipe

The refrigerant pipe will extend and shrink with each start or stop of the air conditioner unit (5~10 times / hour). Under a temperature difference of 80℃, this extension may reach 13.84mm for every 10m. To prevent failure, the pipes must be reinforced as follows.

Spacing between supports

| Outer diameter of pipe (mm) | 6.35-8.52 | Over 12.7 |
|---|---|---|
| Spacing between supports (m) | Below 1.2 | Below 1.5 |

**Note:**

If the gas pipe and liquid pipe are suspended together, the size of liquid pipe shall prevail

⚠ **CAUTION**

Never make the pipe directly contact with the fixing metal parts. Thermal insulation shall be provided around the fixing metal parts; otherwise, condensing will occur.

5.4.2 Fixing of vertical pipe

The vertical pipe may be fixed by using the commodity tools in market or self-made tools. As above, the fixing point shall also be thermally insulated.

5.4.3 Fixing of other points

Measures shall be taken to prevent the extension or shrinkage of pipes from causing excessive loads to some positions, machine joint and waterproof points. Generally, such positions refer to the branch pipe joint, pipe ends, four sides of indoor unit and wall-cross hole.

**5.5 Management and Machining of Refrigerant Piping**

5.5.1 Storage

◆ After receiving the refrigerant pipe and other components, do not move them to the storage until confirming that they have no deformation, bend, crack or damage.

◆ The pipe end must be sealed to prevent the invasion of moisture or wastes.

◆ The copper pipe with coating may become deformed under the compression of the coating material, so that the coils shall be placed upright.

◆ To avoid the invasion of moisture or wastes, a support higher than the ground must be built by using woods.

◆ Care of pipe end during construction

The pipe ends must be well cared during construction. According to the working position, work progress and surrounding environment, the most effective way is to seal the end and wrap with adhesive tape.

1) Sealing method

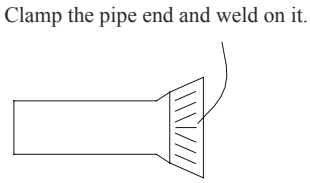


Clamp the pipe end to flat and weld on the clearance. Then, charge nitrogen 2~5kgf/cm2. This will be more effective.

2) Method for wrapping with adhesive tape

Seal the pipe end with ethylene tape.

5.5.2 Unwinding the coil

⚠ **CAUTION**

①. When unwinding the coil, take care not to drag it on the ground. The coil shall be slowly unwound on ground without any twisting. In case of excessive compression by any hard object during unwinding, the thermal insulation materials may be damaged and cannot be recovered, which will deteriorate the performance of thermal insulation. Do not unwind carelessly. Otherwise, the fitting pipe might be flattened.

②. The copper pipe shall be rounded if the pipe end is deformed

The higher the size, the higher the possible deformation.

5.5.3 Measuring

◆ (To reduce the resistance and length of copper pipe), the dimension of main refrigerant pipe shall be so taken that the bends shall be minimized, the radius of bend section shall be increased and the upstream and downstream section shall be reduced. Use the method that can reduce the actual length and equivalent length of the copper pipe.

◆ Sometimes the connection pipe of indoor unit must be adjusted due to the relation with accessories,drainage pipe and connection surface. Therefore, a fairly marginal dimension shall be taken.

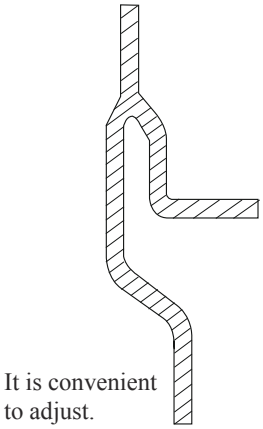


5.5.4 Cut·Chamfer

◆ Cut

a. Cut vertically to axis direction by using special pipe cutter that is suitable to the dimension of copper pipe (big, medium, small).

b. During operation, press and rotate the pipe cutter slowly and cut off the copper pipe without causing any deformation.

Never use saw or grinding wheel, because the copper scraps may be left inside the pipe. Even use of such tools once will make all works scrapped. It is useless no matter how good the quality of other works. It is best that all operators shall have one pipe cutter and at least one pipe cutter of big dimension shall be provided on site.

⚠ **CAUTION**

To prevent the invasion of water or waste, avoid placing the copper pipe directly on ground.

◆ Chamfer

Burrs may occur on the cutting face of copper pipe and must be removed. Meanwhile, purge the foreign articles out of the pipe and refinish the pipe end.

● Use scraper or other tools to remove the burrs on inner side.

(To prevent copper scraps from falling into the pipe, please keep the pipe end downward during operation).

● If the pipe end is obviously deformed, please cut and throw it off, and then refinish the pipe end.

● Eliminate the copper scraps thoroughly, and use cotton yarn to wipe the pipe clean.

※ The flared joint must be kept smooth.

※ When removing the burrs with scraper, do not remove too much, especially for the fitting pipe of small diameter; otherwise the contact surface of the flared joint will be reduced. Do not cause any scores, and avoid cracking after the flared joint is formed.

※ Adverse impact if the burrs are removed too much with scraper.

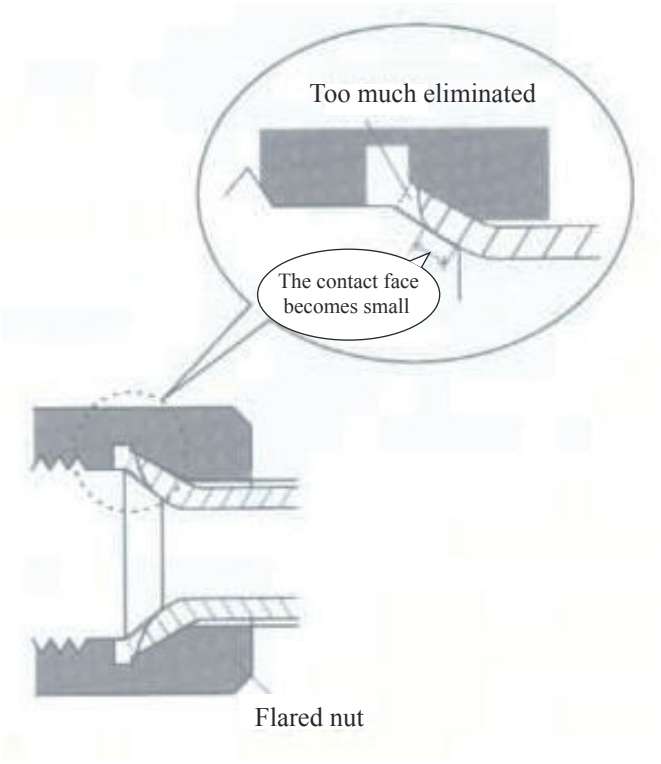


5.5.5 Pipe bending

◆ Work Methods

1) Bend by hand ……..Suitable to fine copper pipe (φ6.35mm-φ12.7mm).

2) Machining with spring pipe bender …….. Bend by inserting the spring into copper pipe or sheathing onto the copper pipe (φ6.35mm-φ22.2mm).

3) Machining with hand-operated pipe bender……Use the pipe bender of suitable dimension (φ6.35mm-φ22.2mm).

4) Machining with electric pipe bender (hydraulic)……Suitable for mass machining of fine and coarse fitting pipes (φ6.35mm-φ69.9mm).

**Advantage**

※ Decrease the weld joint, thus reduce the possibility of leakage and oxidization.

For example:

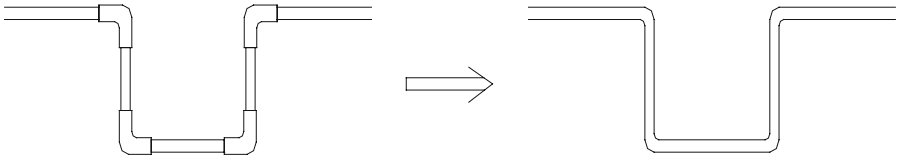

It can decrease the weld by 8 spots. Please act now to improve the quality.

※ No joint is required, which will save the material costs. Reduced waste of fitting pipe materials.

※ Reduced resistance in the fitting pipe. The bending radius higher than the pipe joint.

◆ **Cautions:**

※ During bending, there shall be no wrinkling or deformation on the inner side of the copper pipe.

※ Spring pipe bend

※ The bender inserted into the copper pipe must be cleaned.

※ Do not bend over 90º. (Otherwise, wrinkling may be formed on the inner side of copper pipe and in the future, the copper pipe will be broken from this position.)

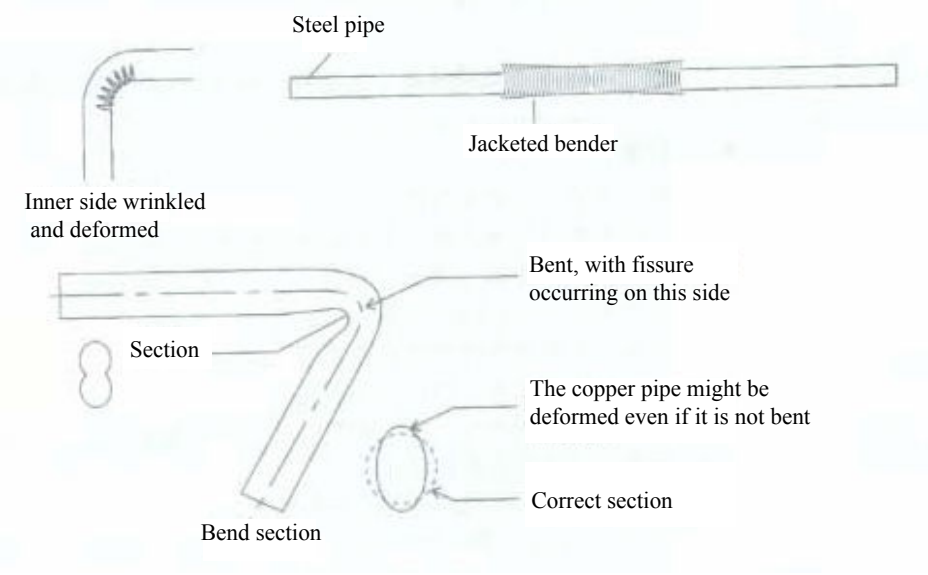


5.5.6 Flaring

The flaring refers to expansion of pipe opening. The copper pipe is inserted here to replace the casing pipe. In this way, it is only needed to weld on one position where the pipe is expanded.

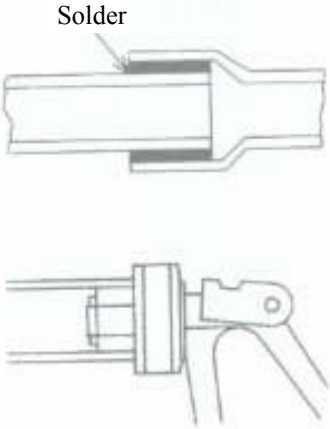

## 5.6 Installation of Refrigerant Piping

5.6.1 Precautions on piping works

◆ At the site of transport, storage and construction, the two ends of copper pipes shall be sealed with plastic sealing caps. Before welding, copper pipes must be cleaned (washing the inner side of pipe with alcohol) to ensure no dust and no water in pipeline

◆ Nitrogen-filled welding shall be used for the welding of copper pipes. Nitrogen pressure shall be 0.5±0.1kgf/cm2. Nitrogen flow can be sensed by hand.

◆ When multiple multi-connected units are installed, refrigerant piping must be marked to avoid confusion between pipes of different units.

◆ A two-way drier shall be mounted at the liquid pipe side at the place where an outdoor unit is connected.

5.6.2 Assemble copper pipes

The copper pipe shall be vertically inserted to the specified length. The centerline of two assemblies shall overlap. The position shall be determined for welding. To ensure correct mounting size, do not determine the position with your hands, thus to prevent the copper pipe from moving when heated.

See below for the welding size of copper pipe:

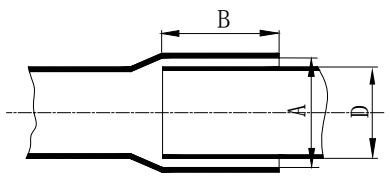


| Outer diameter of pipe D(mm) | Minimum depth of penetration B(mm) | Clearance between pipes A-D |
|---|---|---|
| φ6.35 | 6 | 0.05~0.21 |
| φ9.52, φ12.7 | 7 | |
| φ15.8 | 8 | 0.05~0.27 |
| φ19.05, φ22.2, φ25.4 | 10 | |
| φ28.6, φ31.8 | 12 | 0.05~0.35 |
| ≥φ35 | 14 | |

If the mounting clearance is too large, the diameter of coarse pipe may be reduced to an appropriate value to according to applicable specifications, if any.

5.6.3 Installation of branch pipe

◆ The branch pipe plays the function to divert the refrigerant flow. Therefore, the selection and installation of branch pipe is very important to the operation of multi-unit. Based on correct selection of branch pipe, the branch pipe must be installed according to installation specifications.

◆ Connection schematics for Y-type branch pipe

The connection of Y-type branch pipe is as shown below. The inlet is connected to outdoor unit or previous branch; the outlet is connected to indoor unit or next branch.

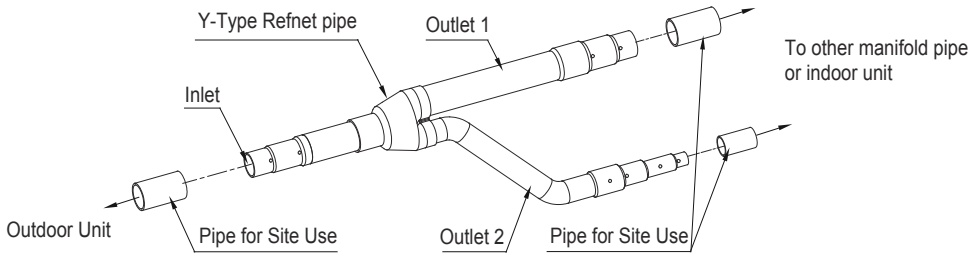


◆ Installation specifications for branch pipe

Placement of branch pipe

The branch pipe can only placed horizontally. Meanwhile, two branch pipes must be on the same plane. The spacing between two branch pipes must be over 800mm, the spacing between two bends must be over 800mm, and the spacing between branch pipe and bend point must also be over 800mm.

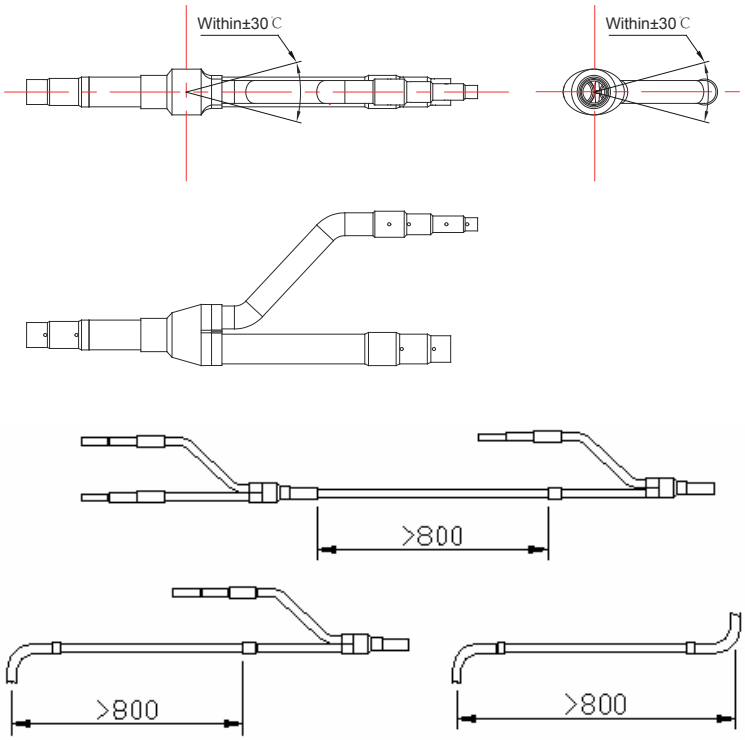


Connection of branch pipe

The Y-type branch pipe is installed with additional tube. The purpose is to adjust the different pipe diameters. If the pipe size selected on site is different from the size of branch connector, please use the pipe cutter to cut from the middle of different connection pipes and remove the burrs. Then, insert the copper pipe to appropriate depth. The branch pipes from Gree are all provided with positioning mark.

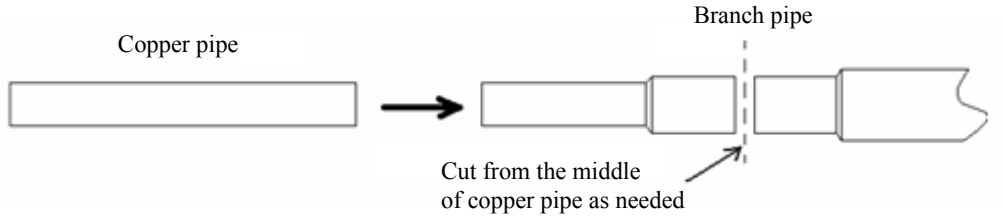


Do not use the connection method that the copper pipe is cased on branch pipe of smaller diameter.

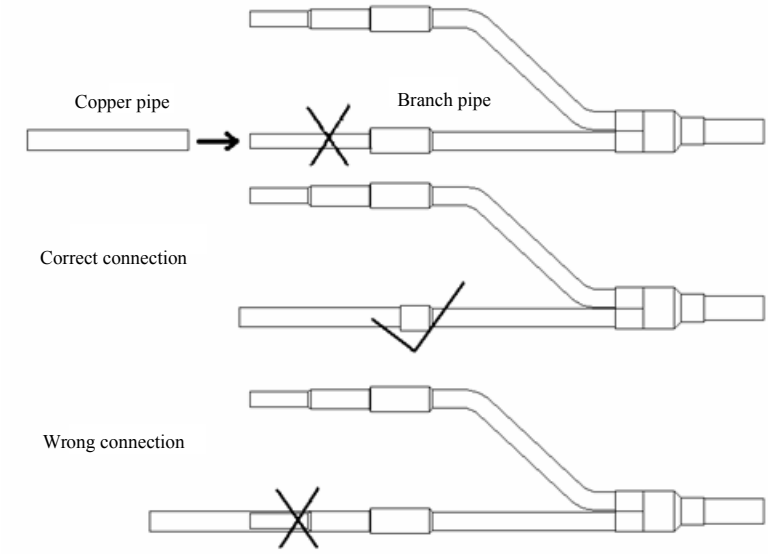

The copper pipe shall not be inserted into the branch pipe too deep.

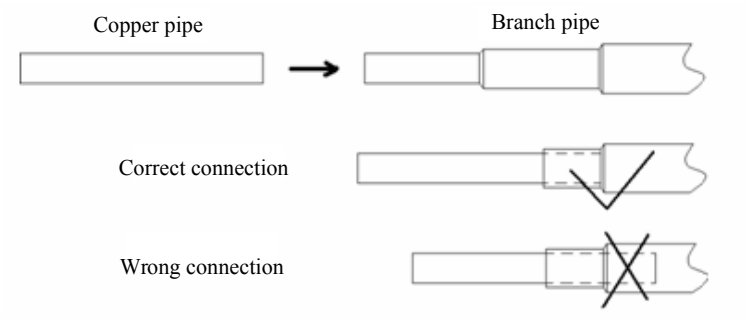


**5.7 Welding of Copper Pipe**

5.7.1 Braze welding

**Materials for braze welding**

There are two kinds of braze welding, soft braze welding and hard braze welding. Hard braze welding is required in this case.

**Selection of braze welding**

Red copper + red copper:brazing filler metal is Bcu93P(GB 6418),and welding flux is not needed.

Flame flux: capable of preventing the surface of copper pipes from oxidation, recommended for use.

Temperature for braze welding:820-860 ℃ (copper pipe becomes light red)

5.7.2 Safety acknowledgement before operation

a. Roll calling of construction personnel and confirmation on their health status.

b. Acknowledgement on work suits(helmets, clothes, safety bags and safety shoes)

c. Description of work location and environment.

d. Job division shall be made. Job content, method and order shall be indicated. Risk prediction activities shall be performed.

e. “Construction Schedule” shall be worked out.

f. Head of each group shall be assigned

g. Risks of occurrence of an accident such as electric shock or fire shall be indicated.

h. Instructions on how to use electric machinery properly shall be available.

i. Locations marked with “Staff Only” shall be indicated.

j. An application is necessary for use of open flame and shall be reviewed by on-site safety officer for approval.

k. Instructions given by fire authorities shall be accepted in accordance with local laws and regulations.

l. Tools shall be sorted and counted. Upon knocking off for the day, tools shall be sorted and counted. If necessary, the piping system shall be charged with coolant to avoid exhaustion.

6.7.3 Attention

a. Construction personnel must have relevant operation qualification.

Flame operation must be undertaken by qualified persons in accordance with local laws and regulations.

b. Wear coveralls (cotton for the best), safety shoes, safety helmet, leather gloves, protective goggles and anti-dust mask.

Welding torch with back fire arrestor shall be used to ensure safety.

c. Take care not to be burned by flame and heating parts.

d. Gas cylinder shall be handled carefully to prevent leakage.

e. Combustible substances in the surrounding areas shall be moved away. If movement is impossible, fire proofing treatment shall be taken properly, such as being covered by flame-proof enclosure.

f. Good ventilation is necessary to avoid breathe in of harmful gas.

g. Appropriate measures shall be taken if there is a safety problem.

h. Operation on connectors of branch pipes as well as on the surrounding of pipe ends shall be performed on the ground as possible, because heating is difficult to control at a high place and welded part of a branch pipe is prone to be melted to cause leakage.

For example:

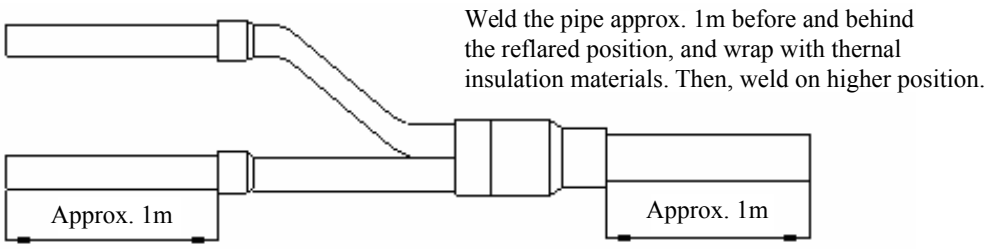


i. To avoid the position difficult to weld, you may add a prefabricated assembly below.

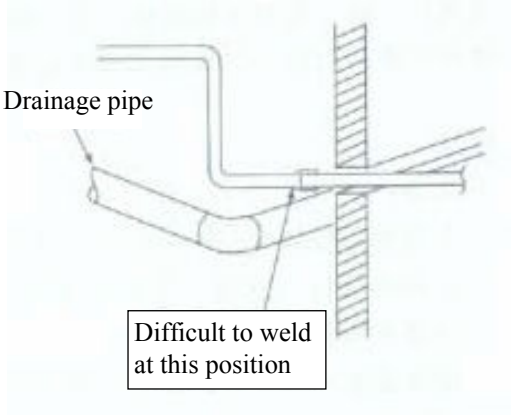


5.7.4 Operation order

Basic procedures for welding:

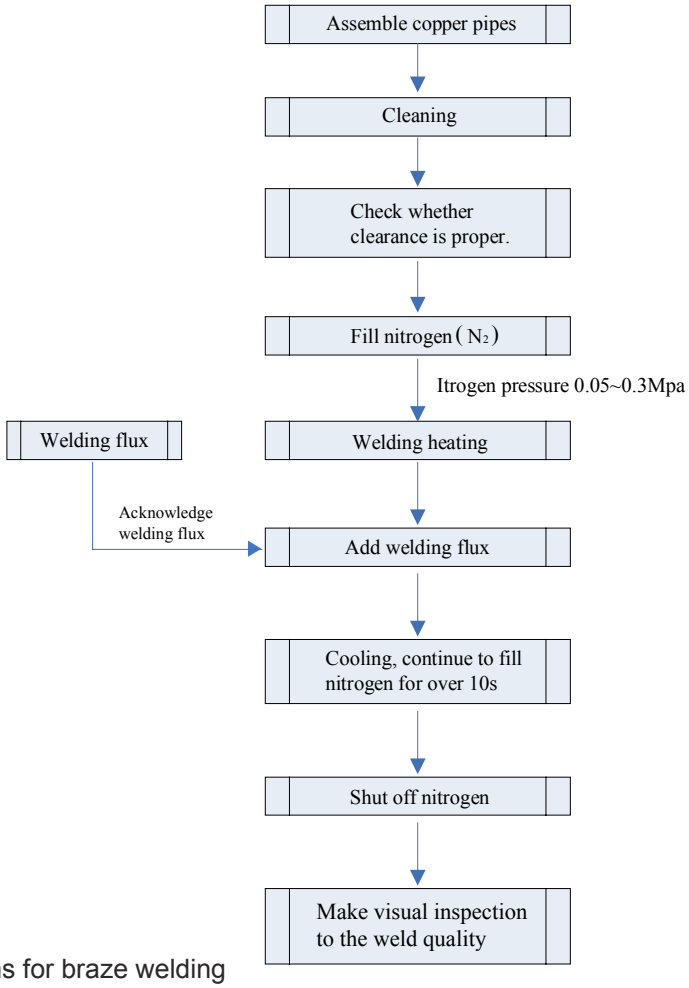


a. Cleaning of portions for braze welding

Polishing……Removing metal materials at connection portion. (Removing oxidation film using non-woven fabric, abrasive cloth or abrasive paper)

Ungrease……If any oil stain is existent, acetone or spirit solvent shall be used for ungrease treatment.

At the same time, compressed air at 0.8MPa (gauge pressure) shall be used for cleaning The cleaning shall be repeated not less than 3 times, until there is no dirt discharged.

b. Check whether clearance between pipe and connector is proper.

Put the connector into the pipe and face downward. If the connector does not fall down depending on friction force, the clearance is considered proper.

c. Nitrogen-filled protection

● Since vigorous oxidation would occur on the surface of copper pipe at braze welding temperature, to effectively restrain the generation of oxide coating in copper pipe, nitrogen-filled protection for copper pipe is necessary.

● After copper pipes are assembled, nitrogen shall be filled in copper pipe connectors

● Method for charging nitrogen into copper pipe

**Nitrogen charging method:**

Pressure is 0.5±0.1kgf/cm2. Nitrogen flow of 4~6L/min (gas flow can be sensed by hand) shall be guaranteed to charge in work pieces.

After assembling, nitrogen begins to charge until welding is finished and will continue over 10s during cooling after welding.

※ Main points of nitrogen charge(See the drawing below)

◆ When nitrogen is charged, the press switch on the quick connector and inflator shall be closed to let nitrogen totally filled in the pipe.

◆ Make sure nitrogen reaches all welding connectors in order to effectively discharge air

◆ A vent port must be available when nitrogen charge is continuously performed, or otherwise gas would escape from gap around connector, making welding stuffing difficult and prone to pores.

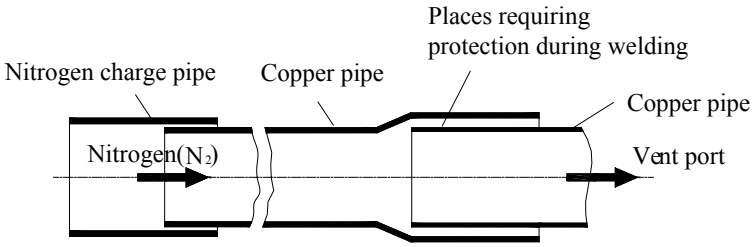


d. Welding heating

Notes:

● Braze welding is flame hard braze welding. Relevant safety operating regulations must be abided by.

● Confirm that nitrogen is flowing through before copper pipe is heated.

● Neutral flame or slightly reducing flame shall be used for red copper braze welding. Outer flame is normally used. Copper pipe connectors shall be heated uniformly. Take care to distribute heat in terms of dimension of pipe material. Generally, insert pipe shall be preheated at first for close matching and then swayed along length of connector to make it heated uniformly until braze welding temperature is approached; then copper pipe is heated circularly to reach braze welding temperature (copper pipe becomes light red) and at the same time brazing filler metal is added circularly to fill in the clearance around the connector uniformly; and afterwards, the welding torch is slowly moved away from the pipe and a small amount of brazing filler metal continues to be filled in until smooth fillet is formed.

● During heating, welding rod shall not be burned directly by flame. Heating time shall not be very long.

● During welding, flame shall be controlled well on its direction and kept away from rubber casing, sponge and cables.

e. Post-welding treatment(cooling)

●After welding, in the condition of nitrogen protection available, the connector shall be heated until the copper pipe changes color (200-300℃), i.e. annealing treatment.

● Before welding seam becomes completely solidified, welded pieces shall not be moved or shocked.

● For welded piece cooled by water, take care not to let water enter into copper pipe and try to prevent residue water flowing into the pipe when welded piece is laid aside.

f. Quality and inspection of braze welding

Welding seam should have smooth surface. Fillet should be even and full with natural arc transition. Braze welding connector should be free from defects such as over-burning, welding blockage, crack, rough surface of welding seam and burning through. Welding seam should be free from defects such as pore, slag inclusion, underfill, rosin joint and overlap.

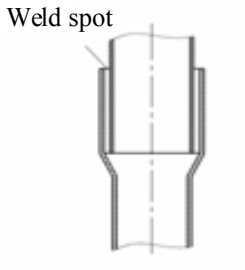


5.7.5 Others

◆ When braze welding is to be performed underneath, a simple support shall be built, such as two ladders.

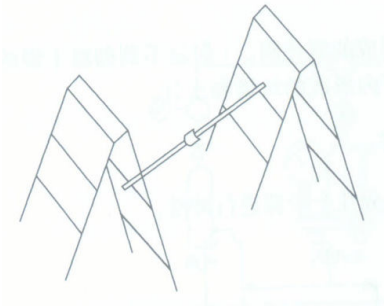

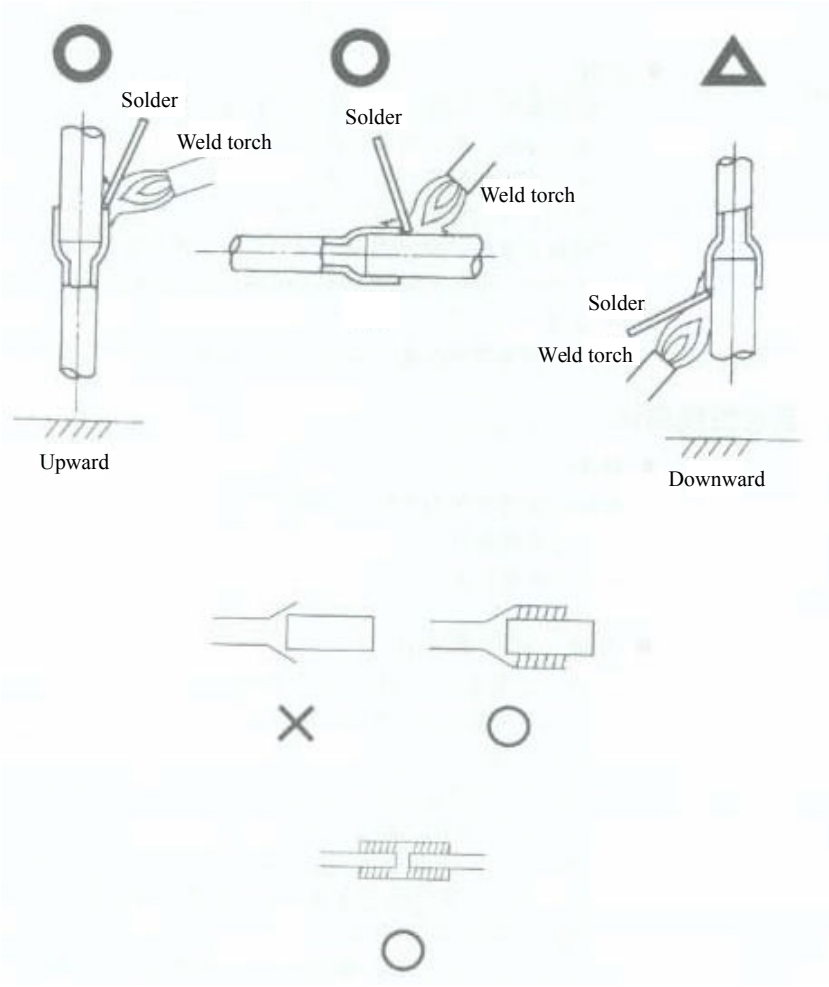

◆ Cooling

o avoid getting a burn in following processes, common wet cloth (humidity content is low, meaning that there shall not be water drips when welded part is cooled; and because shrinkage factor of copper is different from that of welding material, too quick cooling that would cause cracking of braze welding shall be avoided) can be used for cooling welded parts.

◆ The following items shall be checked after welding is completed

● Is there any pore or hole on welded part?

● Is there evident “sagging of brazing filler metal”?

**5.8 Cleaning of Refrigerant Piping**

After a section of pipeline is welded, cleaning of piping is necessary.

Nitrogen pressure is utilized to remove foreign matters (such as dust, water and beryllium oxide caused by welding) in the piping.

5.8.1 Main purposes of cleaning are as follows

◆ To eliminate oxide caused by insufficiency of nitrogen-filled protection during pipe welding.

◆ To remove foreign substances and water that may enter the piping due to improper storage and transport.

◆ To check whether big leakage is existent at connections of the piping between indoor unit and outdoor unit

5.8.2 Cleaning steps:

a. Mount a pressure gauge on nitrogen cylinder;

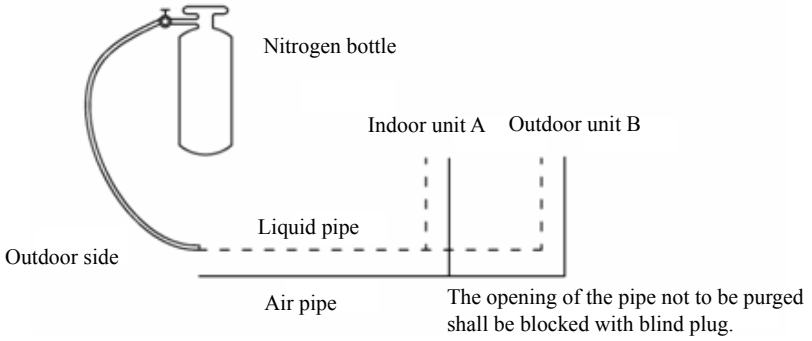


b. High pressure end of the pressure gauge is connected to the refrigerant filling nozzle of the small pipe (liquid pipe).

c. All copper pipe ports outside the A side of indoor unit shall be blocked by blanking plugs

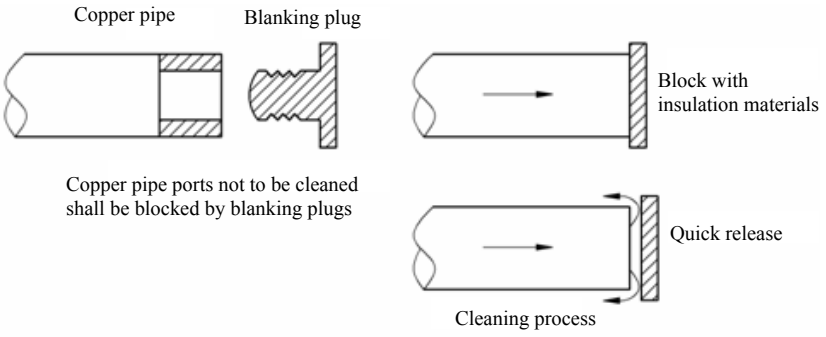


d. The valve on nitrogen cylinder shall be opened to maintain pressure at 28Kgf/ cm2

e. Check whether nitrogen flows through the liquid pipe of indoor unit A

f. Cleaning

The mouth of the pipe shall be blocked with insulation material held by hand until pressure rises to a level difficult to be withstood, and at the moment the insulation material shall be released quickly. And then the mouth shall be blocked again. Repeat such procedures several times. Afterwards, use a wood board posted with white paper to check it. If there is not evident dirt on the white paper, the pipe will be considered clean.

g. Shut off the main valve of nitrogen

h. Repeat the above procedures on indoor unit B

i. After cleaning of liquid pipe, gas pipe shall be cleaned in the same way.

**5.9 Pressure Maintaining and Leak Hunting**

5.9.1 Pressure maintaining of refrigerant piping

After refrigerant piping of a system is welded,

◆ A refrigerant filling nozzle shall be welded respectively on the big pipe and on the small pipe on the outdoor unit side.

◆ Pipes connected to the end of indoor unit and outdoor unit shall be clamped to be flat and welded to be sealed.

Enter into the step of connection pipe pressure keeping and leak hunting

**Operating Steps:**

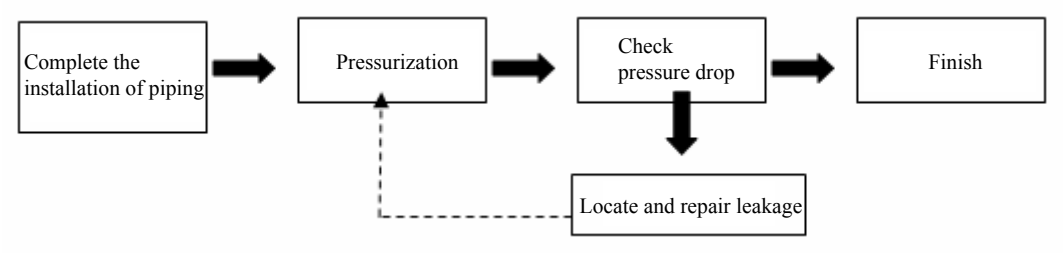


◆ Pressurization

Use nitrogen to add pressure from Freon nozzle of the gas and liquid pipe on outdoor unit side:

Step 1: Increase the pressure to 0.3MPa and wait for 3 minutes or longer

Step 2: Increase the pressure to 1.5MPa and wait for 3 minutes or longer

The step 1 and 2 are focused on checking the significant leakage point. If any, reweld immediately or repair the leakage point.

Step 3: Increase the pressure to 2.5MPa and keep it for approx. 24 hours to check the small leakage.

Though the pressure is increased to 2.5MPa, it cannot be guaranteed to find out the small leakage if the waiting time is too short. Therefore, the pressure in Step 3 must be kept for 24 hours.

Note: During pressure maintaining after nitrogen is filled, the pressure gauge shall not be dismantled, because activities of dismantling or mounting pressure gauge would affect pressure change

◆ Check pressure drop

**Criteria for Inspection eligibility:**

※ Except for temperature influences (pressure changes about 0.01MPa for temperature change of 1℃), if pressure drop is not more than 0.02MPa within 24h, the system will be eligible.

For example, nitrogen is filled to reach 2.5MPa at 30℃; after 24 hours, when temperature becomes 25℃, the system will be eligible if pressure is over 2.43 MPa and ineligible below 2.43 MPa.

※ If ineligible, leak sources must be located. After leak sources are found, re-welding or repair welding is necessary. Then, the above procedures shall be repeated. Nitrogen is filled, pressurized and maintained until pressure drop remains within required range.

◆ Leak check

[Check 1] When pressure drop is found, leak hunting shall be performed in the ways as follows:

a. By ears…….to listen voices related to leakage

b. By hands……to sense whether leakage is existent at connecting parts

[Check 2] If no leakage is found using the above methods, nitrogen shall be discharged and refrigerant shall be filled in to reach 0.5MPa

a. By soap and water……soap bubbles will show leakage positions if any.

b. Detector (such as halide detector) can be used for leak hunting.

Using the above methods, check all possible leak sources.

If leakage still fails to be located, sectional check shall be taken for refrigerant piping that would be divided into multiple check portions for locating leak source in a certain section.

5.9.2 Pressure maintaining and leak hunting of the system(with refrigerant piping in connection with indoor unit and outdoor unit)

When refrigerant piping is to be installed, pressure maintaining and leak hunting is required for the piping. After refrigerant piping is in connection with indoor unit and outdoor unit, pressure maintaining and leak hunting is also required. The purpose of the test is to check whether any leak is existent at threaded connection of indoor unit and outdoor unit and at new welded points.

Steps:

◆ Nitrogen is charged to reach 2.5MPa and remains at the pressure for 24h (nitrogen shall be filled from refrigerant filling nozzles at the big valve as well as the small valve using a pressure gauge; during pressure maintaining after nitrogen is charged, the pressure gauge shall not be dismantled.)

◆ Observe whether pressure changes in 24 hours. (for eligibility criteria, see pressure maintaining and leak hunting of refrigerant piping in 5.5.2)

◆ If any leakage, please check threaded connections and new welded spots of indoor unit and outdoor unit. Repair welding shall be performed immediately. Afterwards, pressure maintaining is repeated until eligibility is reached.

5.9.3 Cautions

a. The pressure meter range of R410A system should be more than 4.5MPa.

b. Record the pressure, ambient temperature and testing hours.

c. Pressure modification: when the temperature changes for 1 1℃, the pressure will change for 0.01MPa.

d. The pressure should be stable.

e. If it is necessary to retain the pressure, the pressure should be decreased to 0.5MPa or below. The long-time high pressure may lead to leak of soldering spot, which may cause safety problem.

f. Before completion of airtight test for refrigerant pipe, do not wrap the soldering spot or horn mouth connecting spot. During pressurizing, pressurize the outdoor side pipe at the same time instead of pressurizing only one side pipe.

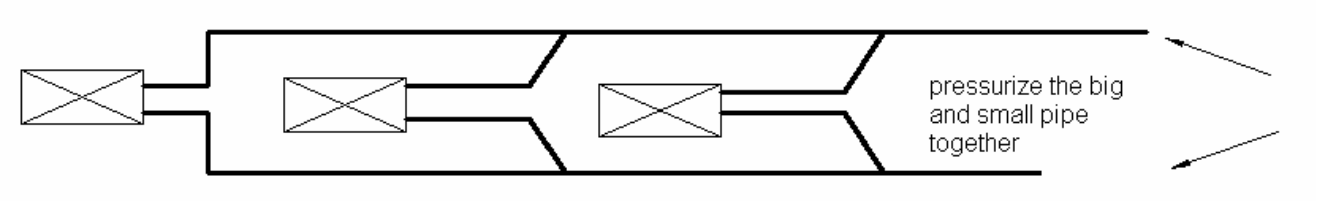


Note: Before completion of airtight test for refrigerant pipe, do not wrap the soldering spot.

**5.10 Heat Preservation of Refrigerant Piping**

5.10.1 Connection of thermal insulation pipe

Carry out thermal insulation to the refrigerant pipe after confirming that it has no leakage.

Please perform thermal insulation to the refrigerant pipe according to the steps below:

◆ Check if the thermal insulation pipe has met the thickness requirements. If not, the condensing water is easy to attach on thermal insulation pipe and finally drips. The thickness requirements are shown below:

| Refrigerant Pipe (mm) (Outer Dia. x Thickness) | Thickness of Thermal Insulation Materials (mm |
|---|---|
| Φ6.35×0.5 | ≥10 |
| Φ9.52×0.71 | ≥10 |
| Φ12.7×1 | ≥15 |
| Φ15.9×1 | ≥15 |
| Φ19.05×1 | ≥15 |
| Φ22.2×1.5 | ≥20 |
| Φ25.4×1.5 | ≥20 |
| Φ28.6×1.5 | ≥20 |
| Φ34.9×1.5 | ≥20 |

◆ Wrap the refrigerant pipe according to required thickness. The clearance between thermal insulation

pipes shall be sealed with self-adhesive sticker.

◆ Wrap the thermal insulation pipes with tapes, thus to extend their ageing time

5.10.2 Cautions:

The thermal insulation materials shall be able to withstand the pipe temperature. For heat pump unit, it is required to withstand a temperature not lower than 70℃ on liquid pipe side and not lower than 120℃ on gas pipe side. For cooling-only unit, it is required to withstand a temperature not lower than 70℃ on both liquid pipe side and gas pipe side.

Example: Heat resistant PVC foam (over 120℃); Foam PVC (over 100℃)

◆ The connector between indoor unit and outdoor unit shall be wrapped with thermal insulation materials, and shall have no clearance to the wall on which the outdoor unit is mounted, as shown below.

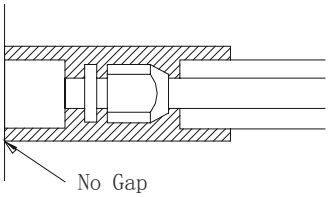


◆ When wrapping the thermal insulation tape, each circle shall suppress half of the previous circle. To avoid reducing the thermal isolation effect, do not wrap the tapes too tight.

◆ After completing the protection work and wrapping the pipes, use the sealing materials to block the holes in the wall.

**5.11 Vacuum Pumping**

5.11.1 Purposes of vacuum pumping

◆ Discharge air and nitrogen in the piping to obtain vacuum state.

◆ Vacuum is dry, capable to remove moisture in the system.

Under atmospheric pressure, the boiling point of water is 100℃. But with increased vacuum degree created by vacuum pump, the boiling point rapidly reduces. If boiling point reduces below ambient temperature, moisture in piping will be evaporated. If vacuum is 0Kgf/cm2of absolute pressure (gauge pressure is -1Kgf/$cm^2$), moisture in the system can be evaporated totally

5.11.2 Selection of vacuum pump

Proper vacuum pumps must be selected before vacuum pumping. Insufficient capacity of selected vacuum pump would lead to overtime of vacuum pumping and fall short of the requirement for vacuum degree. A proper vacuum pump can obtain vacuum degree of 0Kgf/cm2 (gauge pressure -1 Kgf/cm2) after vacuum pumping.

◆ Features of a vacuum pump shall be determined by two factors as follows:

◆ Selection of a pump that can meet expected requirement (i.e. gauge pressure of -0.1MPa shall be obtained)

Exhaust flow is high (over 40L/min).

The following vacuum pumps are recommended

| Model | Maximum vacuum air displacement | Use | |
|---|---|---|---|
| | | Air discharge | Vacuum drying |
| Lubricant shaft pump | 100L/min | Suitable | Suitable |
| Non-lubricant shaft pump | 50L/min | Suitable | Suitable |

Comparison table of different pressure units is as follows:

| | Unit | Standard air pressure | Vacuum degree |
|---|---|---|---|
| Relative pressure | kg/cm2 | 0 | -1.033 |
| Absolute pressure | kg/cm2 | 1.033 | 0 |
| mmHg | mmHg | 0 | -755 |

5.11.3 Vacuum pumping

**The steps are as follows:**

a. Expel the nitrogen after leakage detection;

Connect the pressure gauge to Freon nozzle on outdoor liquid valve and gas valve, and connect a vacuum pump. Then, establish vacuum simultaneously from high pressure side and low pressure side.

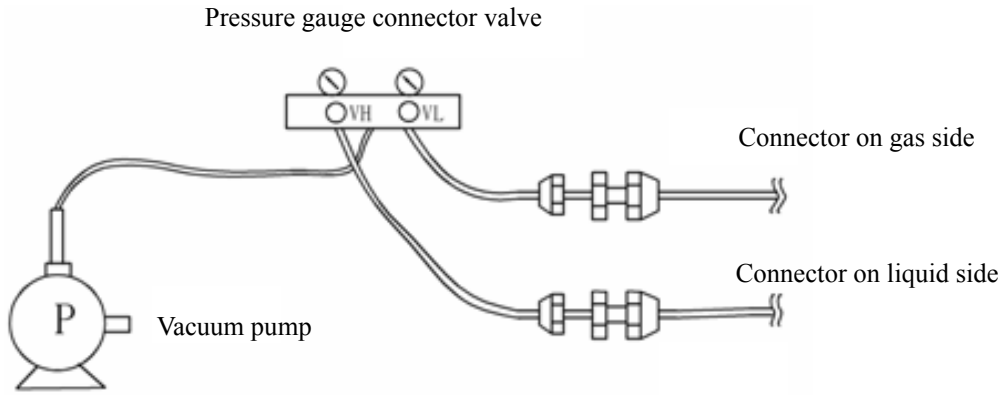


Start the vacuum pump and turn on “LO” and “HI” knobs;

b. Continue for 0.5~1.0 hour after the vacuum level reaches -0.1MPa (gauge pressure -1kgf/cm2). Then, close the “VH” knob on high pressure end and “VL” knob on low pressure end to stop the vacuum pump.

c. Remove the hose connected to vacuum pump and reconnect it to the refrigerant tank. Expel the air in the hose. Open the “VL” knob on low pressure end to charge refrigerant to the system piping. When the pressure reaches 0.0kgf/ cm2, close the “VL” knob on low pressure end.

d. Remove the hose connected to refrigerant tank and reconnect it to vacuum pump. Start the vacuum pump and open the “VH” knob on high pressure end. Pump for 30 minutes from high pressure end and then open the “VL” knob to pump from low pressure end, until the vacuum level reaches -0.1MPa (gauge pressure -1kgf/cm2).

If the vacuum level reaches -0.1MPa (gauge pressure) or lower, the vacuuming process is then ended. Stop the vacuum pump and place still for 1 hour. Then, check the vacuum level for any change. In case of any change, it indicates that there is leakage. In this case, proceed to leakage detection and repair.

e. When the procedures for vacuum pumping are finished, refrigerant shall be charged.

**5.12 Refrigerant Charge**

5.12.1 Calculation method for refrigerant charging

Refrigerant shall be charged according to calculated amount specified in engineering drawings.

Method for calculation of added refrigerant volume (based on liquid pipe)

Mass of refrigerant to be charged =∑ length of liquid pipe × refrigerant charge amount of every meter of liquid pipe.

| Amount of refrigerant charge for every meter of liquid pipe(kg/m) | | | | | |
|---|---|---|---|---|---|
| Φ22.2 | Φ19.05 | Φ15.9 | Φ12.7 | Φ9.52 | Φ6.35 |
| 0.35 | 0.25 | 0.17 | 0.11 | 0.054 | 0.022 |

**Note:**

**a. Standard pipe length is 15m. If refrigerant piping (L) is shorter than or equal to 15m, no additional refrigerant is needed If piping is longer than 15m (based on liquid pipe), more refrigerant shall be added. The above table shows how much refrigerant shall be charged for every one additional meter of piping.**

b. Electronic balance shall be used for refrigerant charge.

c. Thickness of pipe wall shall be 0.5~1.0mm and pressure-bearing capability shall be 3.0MPa.

d. The longer the piping, the more refrigerating capacity and heating capacity shall be weakened.

5.12.2 Steps of refrigerant charge are as follows:

a. The connecting hose of refrigerant cylinder shall be connected to the connector of the pressure gauge. The valve VH shall be opened to discharge air in the hose. Then, the high pressure end of the pressure gauge shall be connected to the refrigerant filling nozzle on the small valve of outdoor unit.

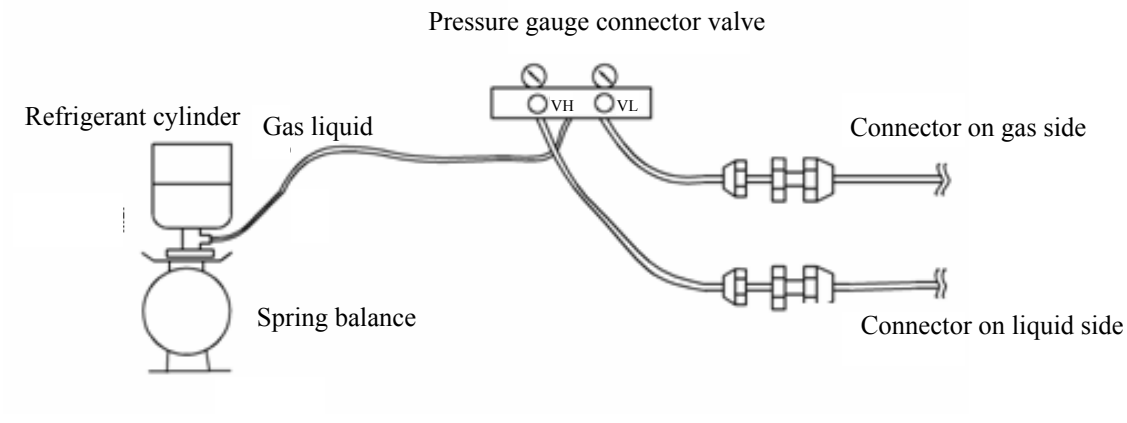


b. Open pressure gauge valve VH, then fill liquid state refrigerant into the liquid pipe side until required amount is reached.

If refrigerant can not be charged in system unless the unit is turned on, let the system run at full-load cooling mode. Open VH and discharge air in the hose. The high pressure end of pressure gauge is connected to the refrigerant filling nozzle on the small valve of outdoor unit. Open VL and charge gas state refrigerant into the gas pipe until required charging amount is reached.

c. Observe electronic balance or spring balance. When required amount is reached, the valve shall be closed very quickly and then source valve on the refrigerant valve shall be shut off

d. The amount of charging refrigerant shall be recorded.

Refrigerant charge shall be recorded as per the following table.

| Unit Mark | Amount of charging refrigerant(kg) |
|---|---|
| Unit 1 | |
| Unit2 | |
| …… | |
| Unitn | |

## 6 INSTALLATION OF CONDENSATE PIPE

### 6.1Material Quality Requirements for Condensate Pipe

Generally, the condensate pipe shall be water supply U-PVC pipe, adhered by using special glue. The other materials available include: PP-R pipe, PP-C pipe and hot-dipped galvanized steel pipe. It is not allowed to use aluminum plastic composite pipe.

### 6.2 Key Points for Condensate Pipe Installation

6.2.1 Work Order

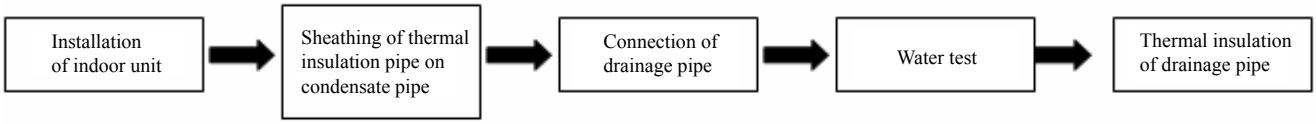


6.2.2 Determine the direction and elevation of condensate pipe before installation. To ensure the gradient smooth and straight, avoid intersecting with other pipelines. The height of the clamp fixing the pipe hanger frame shall be adjustable and fixed from the outer of thermal insulation.

6.2.3 Distance between hanger frames:

| Outer diameter of water pipe (mm) | ф ≤ 25 | 32 > ф ≥ 25 | ф ≥ 32 |
|---|---|---|---|
| Spacing between horizontal pipes (mm) | 800 | 1000 | 1500 |
| Spacing between standpipes (mm) | 1500 | | 2000 |

Each standpipe shall have two hanger frames at least.

6.2.4 The gradient of condensate pipe shall be over 1% and the gradient of main pipe shall not be less than 0.3%, while there shall be no overhanging slope.

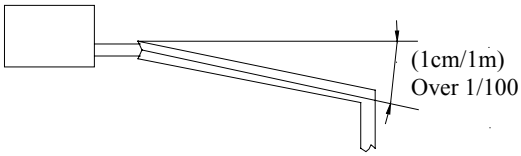


6.2.5 When connecting the 3-way section of condensate pipe, the 2-way straight section on 3-way pipe shall be on the same gradient. The two ends of 2-way section shall not have different gradient. See the schematics below:

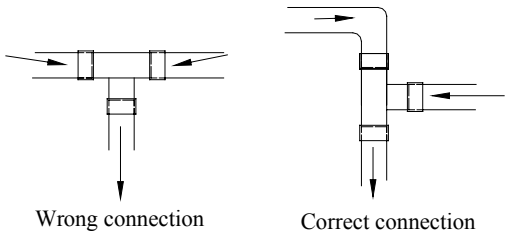


6.2.6 Confluence toward the horizontal pipe shall be best from the upper. Back flow is easy to occur if from the lengthwise direction.

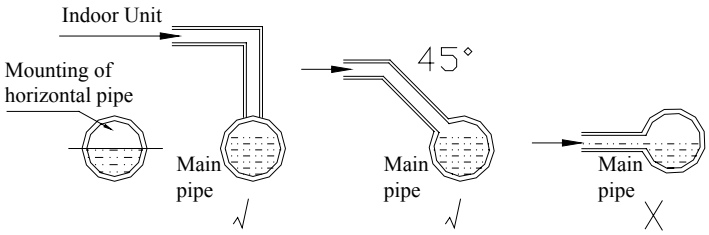


6.2.7 Do not tie the condensate pipe and refrigerant pipe together.

6.2.8 To ensure smooth drainage of condensate, a vent hole shall be set at the highest point of drainage pipe.

6.2.9 Carry out water flow test and full water test after the pipe connection is completed. On one hand, check if the drainage is smooth; on another hand, check the piping system for any leakage.

6.2.10 Steel sheath shall be provided to the pipe crossing the wall or slab. The pipe joint shall not be positioned within the sheath. The steel sheath shall be flush with the wall surface or slab base, but 20mm higher than the slab base. The sheath shall not affect the pipe gradient. The clearance between pipe and sheath shall be blocked by using flexible inflammable materials. The sheath shall not be used as the supporting point of the pipe.

6.2.11The joint of thermal insulation materials must be adhered by using special glue and then wrapped with plastic tape having a width not less than 5cm to avoid condensing.

6.2.12 Ensure a gradient over 1% when connecting the drainage pipe to the indoor unit.

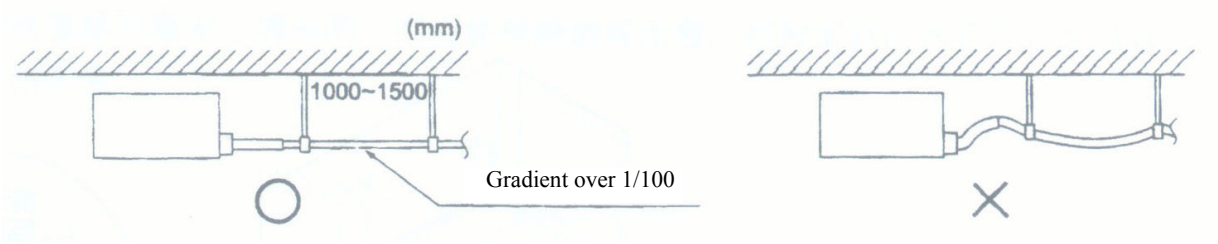


6.2.13 When connecting the drainage pipe to the indoor unit, please fix with the included pipe clamp and do not use glue water, thus to ensure easy repair.

6.2.14 Installation requirements for auxiliary drainage pipe

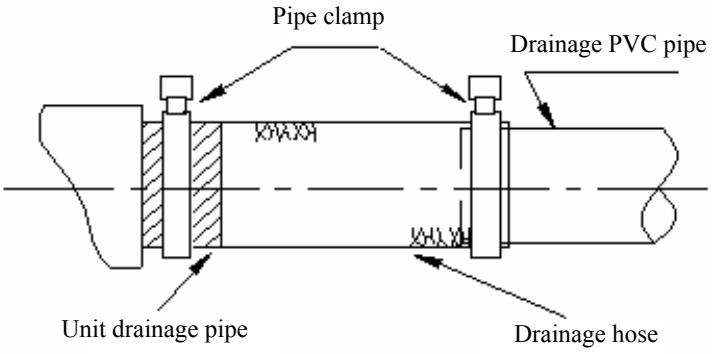


The auxiliary drainage pipe must be thermally insulated:

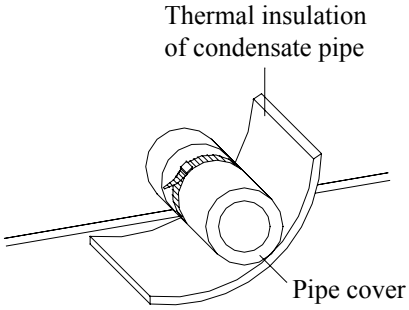


6.2.15 The long drainage pipe may be fixed by using hanger bolts, thus to ensure a gradient of 1/100 (PVC cannot be bent).

The spacing between the supports of horizontal pipe is 0.8-1.0m. Twisting will be caused and thus air bag will be formed if the spacing is too high. Once the air bag is formed, the pump can only compress the air bag no matter how forcible it pushes, but there is no flowing water, thus resulting in abnormal water level. This will cause flooding of the ceiling.

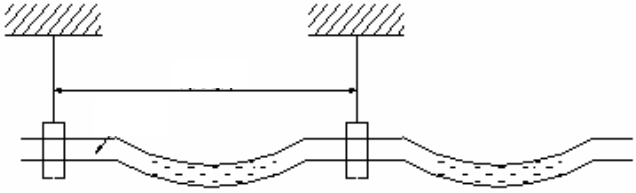

6.2.16 If the air flow of indoor unit is high, this might cause negative pressure and result in return suction of outdoor air. Therefore, U-type water trap shall be designed on the drainage side of each indoor unit.

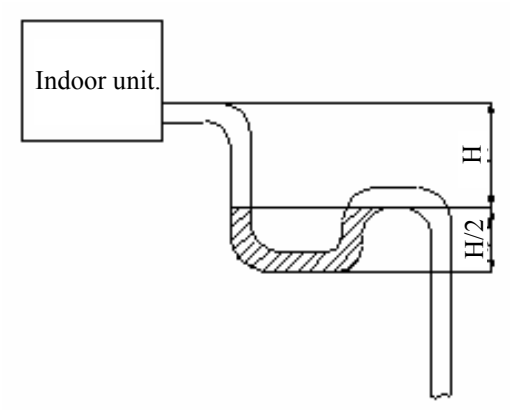


◆ Install water trap as shown below;
◆ Install one water trap for each unit.
◆ Installation of water trap shall consider easy cleaning in the future.

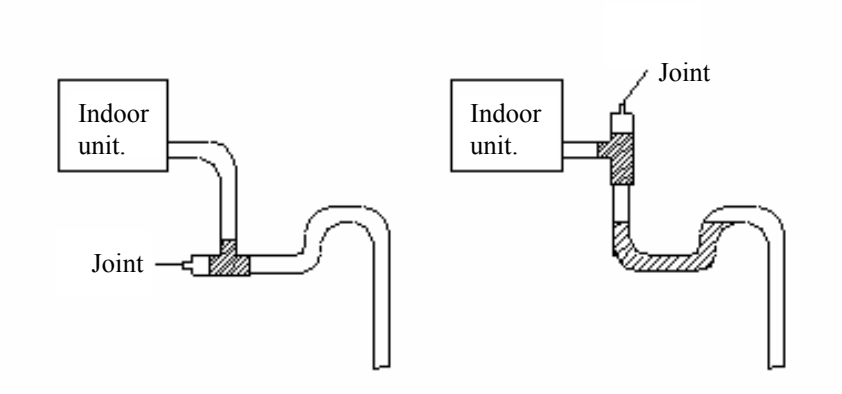


6.2.17 Connection of drainage branch pipe to the standpipe or horizontal pipe of drainage main pipe.

The horizontal pipe cannot be connected to the vertical pipe at a same height. It can be connected in a manner as shown below:

N01: 3-way connection of drainage pipe joint

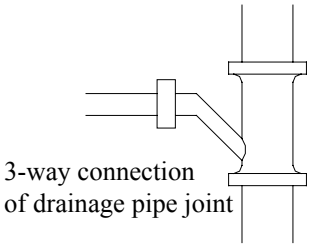


NO2: Connection of drain elbow

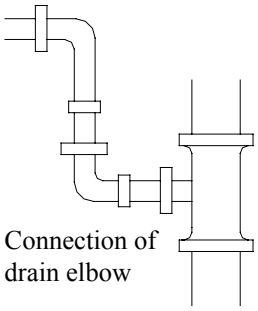

NO3: Connection of horizontal pipe

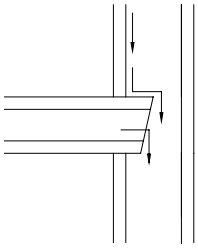

Connection of horizontal pipe

Drainage pipe is requisite for air conditioner unit. During cooling, the moisture in the air will condense on the surface of evaporator. Such condensing water must be drained out of the unit. Meanwhile, the drainage pipe has an important role to determine if the air conditioner can plays its full functions.

6.2.18 All the condensate pipes must be installed at a distance over 500mm from the electric box of the unit.

### 6.3 Test for Condensate Pipe

The water test for condensate pipe includes closed water test and drainage test. The closed water test is focused on checking if the drainage pipe system is well sealed and if there is any leakage. The drainage test is focused on checking if the drainage pipe system can drain water smoothly and thoroughly and ensuring that there is no water deposit (except the specially designed water trap).

After connection of the drainage pipe is completed, firstly carry out closed water test. Seal the outlet of drainage pipe with adhesive tape or plug. Then, fill water into the drainage pipe system form indoor unit side. Stop filling after ensuring that all the drainage pipes are filled with water. After 24 hours, check all the joints of water pipe for any leakage. If any, repair and reinstall. If no leakage, proceed to drainage test.

Remove the adhesive tape or plug from the drainage pipe. Check the water tray and drainage pipe of indoor unit if the drainage is thorough and if there is any water deposit. If any, readjust it. If not, complete the water test and proceed to the thermal insulation on all pipe joints.

### 6.4 Requirements of Heat preservation

◆ Heat Insulation Materials
The thermal insulation material of obturator foam shall be used. Fireproof level: B1.
The thermal conductivity shall not be higher than 0.035w/ (m·k) when the average temperature is 0 ℃.

◆ Thickness of thermal insulation layer
The thickness of thermal insulation layer on condensate pipe shall be over 10mm.

◆ The joint of thermal insulation materials must be adhered by using special glue and then wrapped with plastic tape having a width not less than 5cm to avoid condensing.

◆ Thermal insulation is not required for the outdoor section of condensate pipe.

# 7 ELECTRICAL INSTALLATION

## 7.1 Precautions for Electrical Installation

◆ Carry out installation according to national cabling rules.

◆ Rated supply voltage and special circuit for air conditioner must be used.

◆ Do not pull the power cables with force.

◆ All the electric installations must be carried out by specialist technicians in accordance with the local laws, rules and these instructions.

◆ The diameter of power cords must be large enough. The damaged power cords and connection wires must be replaced with special cords.

The earthing shall be secure. The earthing wire shall be connected to the special earthing device on the construction. The installation must be done by specialist technicians. The air switch shall have both the magnetic tripping and thermal tripping functions to ensure protection against the short circuit and overload.

**●Earthing Requirements**

◆ The air conditioner belongs to Category I Electric Appliance. Therefore, be sure to take reliable earthing measures.

◆ The yellow-green wire inside the air conditioner is used for earthing. Do not use it for other purposes or cut it. Do not fix with tapping screw. Otherwise, it will cause the risk of electric shock.

◆ The earthing resistance shall comply with the national standard GB17790

◆ Reliable earthing terminal must be provided on the user's power supply. Never connect the earthing wire to the following places:

① Water pipe; ② Gas pipe; ③ Sewage pipe;

④ Other places that the specialist technicians think unreliable.

## 7.2 Specifications of power cord & circuit breaker

| Model | Power supply (V,Ph,Hz) | Capability of circuit breaker (A) | Min. sectional area of earth lead ($mm^2$) | Min. sectional area of power cord ($mm^2$) |
|---|---|---|---|---|
| GMV(L)-Pd100W/NaB-K | 220~240V 50 Hz | 32 | 4.0 | 4.0 |
| GMV(L)-Pd120W/NaB-K | 220~240V 50 Hz | 32 | 4.0 | 4.0 |
| GMV(L)-Pd140W/NaB-K | 220~240V 50 Hz | 40 | 6.0 | 6.0 |
| GMV(L)-Pd160W/NaB-K | 220~240V 50 Hz | 40 | 6.0 | 6.0 |
| GMV(L)-Pd140W/NaB-M | 380-415V 3N~, 50Hz | 16 | 1.5 | 1.5 |
| GMV(L)-Pd160W/NaB-M | 380-415V 3N~, 50Hz | 16 | 1.5 | 1.5 |

**Note:**

①. The specifications of the breaker and power cable listed in the table above are determined based on the maximum power (maximum amps) of the unit.

②. The specifications of the power cable listed in the table above are applied to the conduit-guarded multi-wire copper cable (like, YJV copper cable, consisting of PE insulated wires and a PVC cable jacket) used at 40℃ and resistible to 90℃(see GB/T 16895.15). If the working condition changes, they should be modified according to the related national standard.

③. The specifications of the breaker listed in the table above are applied to the breaker with the working temperature at 40℃. If the working condition changes, they should be modified according to the related national standard.

## 7.3 Wiring Sketch Map

### 7.3.1 Connection of power cord and communication line

The indoor unit and outdoor unit shall be powered separately.

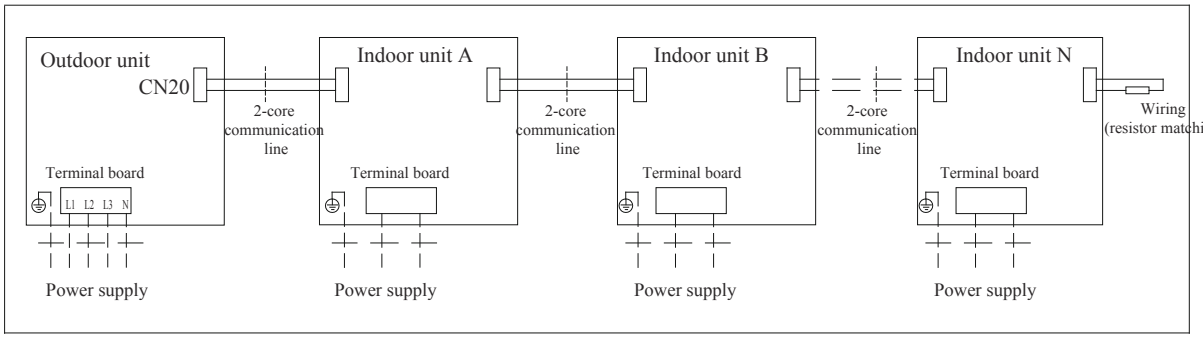


Connection Schematics for Indoor / Outdoor Power Cords and Communication Line (3-phase)

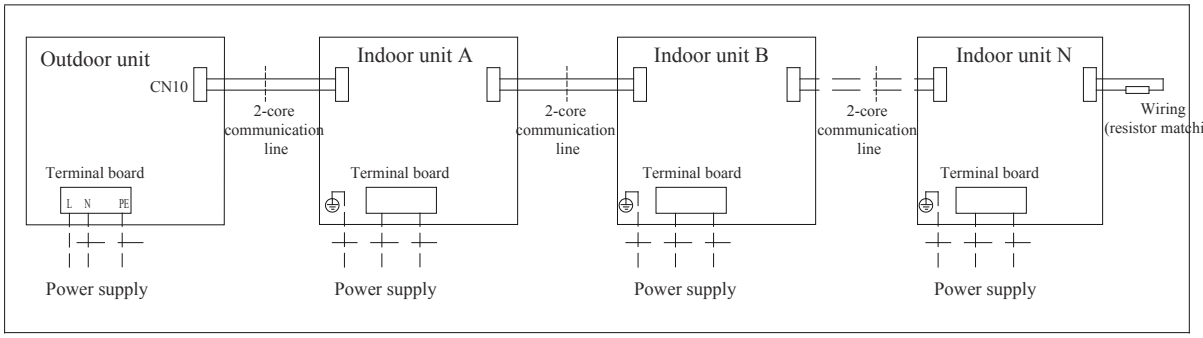


Connection Schematics for Indoor / Outdoor Power Cords and Communication Line

## 7.4 Dial-up

Gree DC Multi VRF unit is provided with three dial-up, i.e. function dial-up, address dial-up and capacity dial-up. ou may adjust the function dial-up to set the control, mode and functions of the unit; adjust the address dial-up to set the matching relation between indoor unit and wired controller; and adjust the capacity dial-up to set the capacity demands of the indoor unit.

### 7.4.1 Function Dial-up

**⚠CAUTIONS!**

**The S7 function dial-up is located on the mainboard of indoor unit. It can be operated only when the client needs to change the default function settings; otherwise the default position shall be maintained.**

| Functional dial switch S7 | | | |
|---|---|---|---|
| DIP swicth | Functional Description: | Dial-up Setting | |
| | | 0 (ON Position) | 1 |
| 1(S/R) | Setting of memory mode | Standby (S) | Restore (R) |
| 2(L/I) | Setting of control mode | Wired control (L) | Remote control (I) |
| 3(M/S) | Setting of master / slave indoor unit | Master indoor unit (M) | Slave indoor unit (S) |
| 4(I/O) | Setting of ambient temperature acquisition point | Return air inlet (I) | Receiver (O) |
| 5(L/H) | Setting of high / low static pressure fan | Low static pressure (L) | High static(H) |

Functional description of function dial-up:

**DIP swicth 1 (S/R):**

Setting of memory mode, including the standby mode and restoration mode. The standby mode refers to that the previous parameters will be kept but the unit will not run automatically after the power supply is resumed. This setting is factory defaulted (DIP swicth pulled to “ON” position). For example, if the parameters of an indoor unit set before power shutdown are High Fan and 24℃, the unit will be under standby state after the power supply is resumed and after the unit is manually started, the parameters will remain as High Fan and 24℃. The restoration mode refers to that not only the previous parameters will be kept, but also that the unit can start automatically after the power supply is resumed. But if the unit is under STOP state before power shutdown, it will be also under STOP state after the power supply is resumed.

**DIP swicth 2 (L/I):**

Setting of control mode, including wired control and remote control. The wired control mode refers to that the indoor unit is controlled from wired controller (wired controller). This setting is factory defaulted (DIP swicth pulled to “ON” position). When the setting is wired control mode, the function dial-up on S7 for “setting of memory mode” and “setting of master / slave indoor unit” will be disabled. These two settings can be done from the wired controller directly. The remote control mode refers to that the indoor unit is controlled from remote controller. When the setting is remote control mode, its function dial-up must be set on S7.

DIP swicth 3 (M/S): The setting of master / slave indoor unit refers to the master / slave setting of indoor run mode, mainly used to meet the needs of special people on priority (e.g. leader, patients, etc). The factory default setting is that all indoor units are master (DIP swicth pulled to “ON” position).

When all the indoor units are set as slave, the outdoor unit will run according to the mode of slave indoor unit that is firstly started. If the mode of slave indoor unit started later has in conflict against the mode started earlier, the system will display mode conflict error, so that the indoor unit started later cannot work. In this case, the run mode of the unit is decided by the slave indoor unit that is firstly started.

When only one indoor unit is set as master, no matter if the master indoor unit is firstly started or not, the slave indoor unit will give out mode conflict error as long as its mode is in conflict against the mode of master indoor unit (except that the master indoor unit is stopped). In this case, the unit run according to the mode of master indoor unit on priority.

When several indoor units are set as master, the mode of master indoor unit with a lower address code will be taken as the master run mode of the unit. when the master indoor unit with the lowest address code is changed from STOP state to RUN state, the mode of other master indoor units or slave indoor units shall be kept identical to its mode; otherwise the system will give out mode conflict error. Therefore, when there are several master indoor units, the address code of the unit shall be set from lower to higher according to priority level.

**DIP swicth 4 (I/O):**

Setting of ambient temperature acquisition point. This setting is mainly used when the temperature of air conditioner area differs largely from the return air inlet temperature of the unit. Meanwhile, this setting is only valid when the receiver is connected, including the setting of temperature acquisition point at return air inlet and setting of the temperature acquisition point at receiver head. The factory default setting is acquisition of return air inlet temperature (DIP swicth pulled to “ON” position).

**DIP swicth 5 (L/H):**

Setting of high / low static pressure fan. This setting includes the setting of high static pressure fan and low static pressure fan, adjusted as needed for the project. The factory default setting is low static pressure fan (DIP swicth pulled to “ON” position).

**Cautions:**

**1)The above settings must be done under power shutdown state.**

**2)The DIP swicth of function code is classified into 3-bit code, 4-bit code and 5-bit code. The 4-bit code or 5-bit code is used for duct-type unit only (including multi duct-type unit and 1-to-1 duct-type unit).**

**3)When the “setting of control mode” is “L”, the function dial-up for “setting of memory mode" and “setting of master / slave indoor unit” will be disabled. When the “setting of control mode” is “I”, this function dial-up setting is enabled.**

**4)The DIP swicth shall be put to position correctly, and shall not be put to middle position. Dialing of the switch to “ON” position indicates “0” and the dialing to opposite direction indicates “1”.**

**5)After dialing up, please mark the address code of the unit(√)**

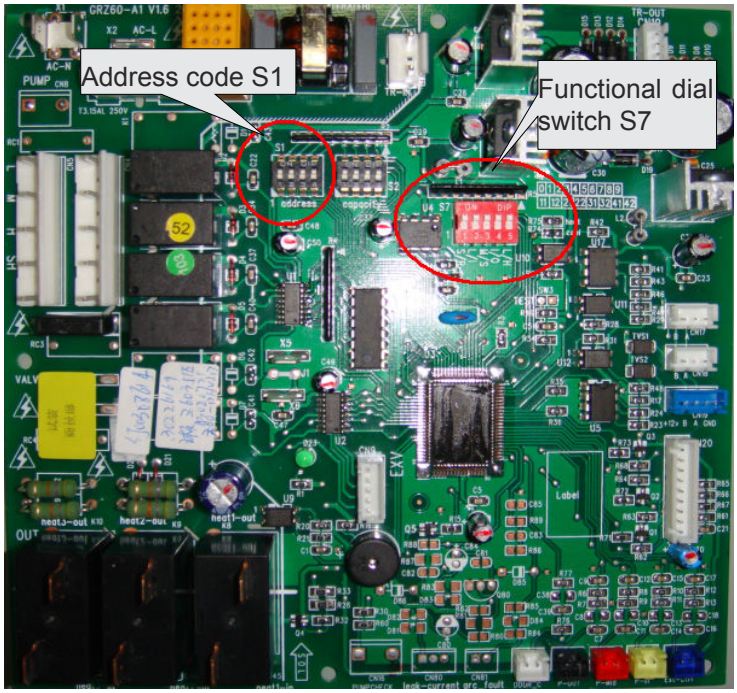


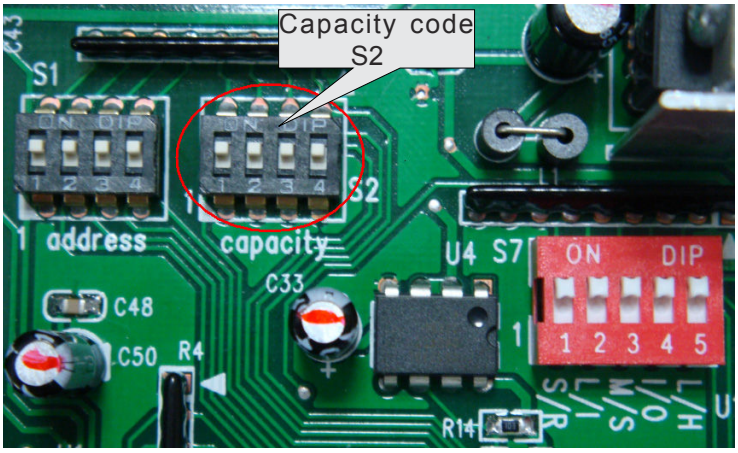


Mainboard of 5-bit functional dial-up

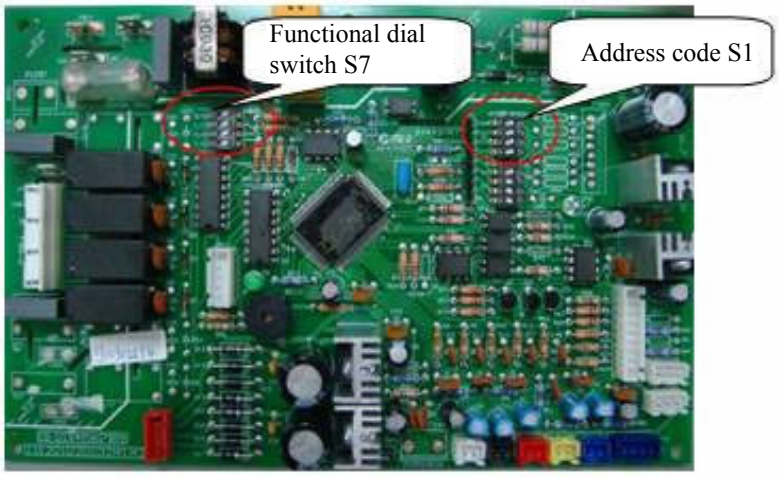

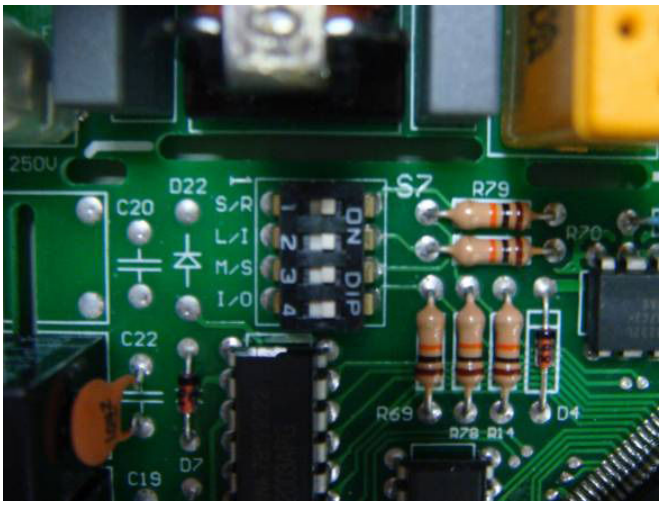


Mainboard of 4-bit functional dial-up

7.4.2 Address code

Address dial-up must be set for the multi indoor units; otherwise the abnormal communication will be caused to the unit. The address code has 4-bit dial-up in total. The highest address is 16 and the lowest address is 1.

⚠ **NOTES!**

**To use multiple indoor units in parallel, make sure to change the setting of address code before installation and guarantee that the address code of each indoor unit must be different (The address code is located on the mainboard of indoor unit). If wired controller is used, make sure to dial the address code of wired controller to the position same as the address code on corresponding indoor unit. (The address code of wired controller is located on the back of wired controller)**

◆ Below is factory default setting:

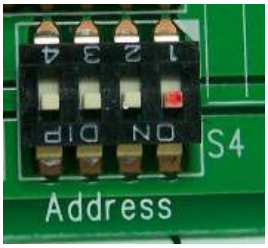


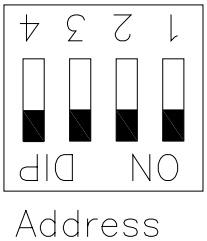


The default setting of address dial-up code is 0000 and the address is 1 (See above for the position of dial lever).

◆ Dial-up Value

The dial-up value of address code is set in binary system. The dial-up value is “0” when the lever is dialed to “ON” end; the dial-up is “1” when the lever is dialed to numerical end on opposite side. For number 4~1 on the address code, the dial-up #4 refers to high bit and the dial-up 1# refers to low bit.

| Dial-up Table (4-bit Dial-up Switch) | | | | |
|---|---|---|---|---|
| 4-bit | 3-bit | 2-bit | 1-bit | Address |
| 0 | 0 | 0 | 0 | 1 |
| 0 | 0 | 0 | 1 | 2 |
| 0 | 0 | 1 | 0 | 3 |
| 0 | 0 | 1 | 1 | 4 |
| 0 | 1 | 0 | 0 | 5 |
| 0 | 1 | 0 | 1 | 6 |
| 0 | 1 | 1 | 0 | 7 |
| 0 | 1 | 1 | 1 | 8 |
| 1 | 0 | 0 | 0 | 9 |

| | | | | |
|---|---|---|---|---|
| 1 | 0 | 0 | 1 | 10 |
| 1 | 0 | 1 | 0 | 11 |
| 1 | 0 | 1 | 1 | 12 |
| 1 | 1 | 0 | 0 | 13 |
| 1 | 1 | 0 | 1 | 14 |
| 1 | 1 | 1 | 0 | 15 |
| 1 | 1 | 1 | 1 | 16 |

Example 1: If the dial value is “0111”, this represents that the serial number is “8”, the pins 1, 2 & 3 of the dial switch are dialed to the opposite end of “ON”, and the pin 4 is dialed to “ON”.

Example 2: If the dial value is “1010”, this represents that the address is “11”, the pins 2 & 4 of the dial switch are dialed to the numerical end, and the pin 1 & 3 are dialed to “ON”.

Refer to the following figure.

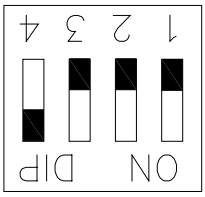


Address

Address 8, dial-up value 0111

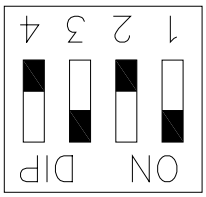


Address

Address 8, dial-up value 1010

7.4.3 Capacity Code

On the mainboard of indoor unit, two 4-bit DIP switches are used to distribute the address and capacity of indoor units. The 4-bit DIP switch (marked with “capacity” below) used for setting the capacity of indoor units is factory set before shipment of indoor unit, while it is covered by sealant, so that it cannot be changed by the user.

◆ Below is factory default setting:

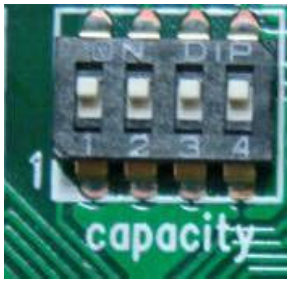


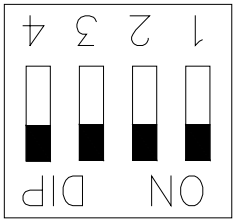


Capacity

The default Capacity dial-up is the maximum capacity of indoor unit. As shown above, the capacity is (See above for the lever position)

◆ Dial-up Value

The dial-up value of capacity code is set in binary system. The dial-up value is “0” when the lever is dialed to “ON” end; the dial-up is “1” when the lever is dialed to numerical end on opposite side. For number 4~1 on the capacity code, the dial-up #4 refers to high bit and the dial-up 1# refers to low bit.

| Dial-up Table (4-bit Dial-up Switch) | | | | |
|---|---|---|---|---|
| 4-bit | 4-bit | 4-bit | 1-bit | Capacity |
| 0 | 0 | 0 | 0 | 20 |
| 0 | 0 | 0 | 1 | 25 |
| 0 | 0 | 1 | 0 | 30 |
| 0 | 0 | 1 | 1 | 35 |
| 0 | 1 | 0 | 0 | 40 |
| 0 | 1 | 0 | 1 | 45 |

| | | | | |
|---|---|---|---|---|
| 0 | 1 | 1 | 0 | 50 |
| 0 | 1 | 1 | 1 | 60 |
| 1 | 0 | 0 | 0 | 224 |
| 1 | 0 | 0 | 1 | 70 |
| 1 | 0 | 1 | 0 | 80 |
| 1 | 0 | 1 | 1 | 90 |
| 1 | 1 | 0 | 0 | 100 |
| 1 | 1 | 0 | 1 | 112 |
| 1 | 1 | 1 | 0 | 140 |
| 1 | 1 | 1 | 1 | 280 |

# MAINTENANCE

# MAINTENANCE

## 1 List of Unit Errors

### 1.1 List of Error Display on Wired Controller

| Error Code | Error Description | Source of Error Signal | Notes on Control |
|---|---|---|---|
| E1 | Compressor high-pressure protection | High-pressure Switch | The high pressure protection value is 4.2MPa. When it is detected three times successively that a compressor is under high pressure, this compressor will be stopped. In this case, error code E1 will be displayed and the run indicator will blink. |
| E2 | Indoor antifreeze protection | Evaporator sensor | When it is detected for 10 minutes successively that Tevap. is ≤ -2℃ (varying with indoor unit), the antifreeze protection will be activated, in which case the outdoor unit will immediately shut off the indoor electronic expansion valve and the capacity will be set to “0”. |
| E3 | Compressor low-pressure protection | Low-pressure Switch | When the low pressure reaches the protection value (absolute pressure: 0.15MPa), the low pressure switch will be cut off, in which case the low pressure protection will be displayed. |
| E4 | Compressor exhaust temperature protection | Exhaust temperature sensor | When the exhaust temperature (Texhau.) is equal to and higher than 113℃ , the compressor will be stopped. Upon the first occurrence of exhaust protection, the error code E4 will be displayed. When the exhaust temperature is lower than TR℃, the compressor will resume to operation after it has been stopped for 3 minutes. The compressor can resume to operation for the first two times. But if this occurs three times successively in 1 hour, the unit must be disconnected from power supply before it can restarted. |
| E5 | Frequency converter overcurrent protection | Compressor drive | The drive board of variable frequency compressor is incurred to error. For details on the error message, please refer to the Display Code on Digital Tube of Outdoor Unit. |
| E6 | Communication error | Communication | The mainboard of indoor unit or the wired control is incurred to communication error with outdoor unit. The indoor unit incurred to communication error will be stopped and display the error code. |
| E7 | Mode conflict | User operation | The run mode of the unit that is started later is inconsistent to the mode that is started earlier. Only the cooling and dry mode has possible mode conflict against the heat mode. For fan mode, there is no mode conflict against the cooling, dry or heat mode. In case mode conflict occurs, the indoor unit with mode conflict will display E7 and be stopped. |
| E9 | Water-full protection | Water pump | When water full is detected for 8 seconds successively, the system will enter into water-full protection state, in which case the wired controller will display E9 and give out alarm. In case of water-full protection under each mode, the other loads of the indoor unit will be stopped, except that the water pump will remain working and give out alarm. In this case, the outdoor unit shall adjust the capacity output accordingly |
| F0 | Indoor ambient temperature sensor error | Indoor room sensor | The indoor unit incurred to sensor error will display error code and be stopped. |
| F1 | Indoor coil inlet temperature sensor error | Indoor coil-inlet temperature sensor | The indoor unit incurred to sensor error will display error code and be stopped. |
| F2 | Indoor coil middle temperature sensor error | Indoor coil-middle temperature sensor | The indoor unit incurred to sensor error will display error code and be stopped. |
| F3 | Outdoor coil inlet temperature sensor error | Indoor coil-exit temperature sensor | The indoor unit incurred to sensor error will display error code and be stopped. |

| | | | |
|---|---|---|---|
| F4 | Outdoor ambient temperature sensor error | Outdoor environment sensor | Test for 30 seconds successively to check if the temperature sensor is disconnected. If yes, alarm will be sent; otherwise no processing will be made. If the controller of outdoor unit detects failure of outdoor sensor under open circuit, short circuit and excess of test value, the outdoor unit will execute the following default actions, that is, the error message will be sent to each indoor unit and the error code will be displayed via error indicator or wired controller. When the outdoor ambient temperature is lower than -5℃, the disconnection failure of outdoor inlet, middle and exit sensors in shield room will be processed as under -30℃. |
| F7 | Outdoor defrost temperature sensor error | Outdoor Defrost Sensor | Test for 30 seconds successively to check if the temperature sensor is disconnected. If yes, alarm will be sent; otherwise no processing will be made. If the controller of outdoor unit detects failure of outdoor sensor under open circuit, short circuit and excess of test value, the outdoor unit will execute the following default actions, that is, the error message will be sent to each indoor unit and the error code will be displayed via error indicator or wired controller. When the outdoor ambient temperature is lower than -5℃, the disconnection failure of outdoor inlet, middle and exit sensors in shield room will be processed as under -30℃. |
| F9 | Exhaust temperature sensor error | Exhaust temperature sensor | Test for 30 seconds successively to check if the temperature sensor is disconnected. If yes, alarm will be sent; otherwise no processing will be made. If the controller of outdoor unit detects failure of outdoor sensor under open circuit, short circuit and excess of test value, the outdoor unit will execute the following default actions, that is, the error message will be sent to each indoor unit and the error code will be displayed via error indicator or wired controller. When the outdoor ambient temperature is lower than -5℃, the disconnection failure of outdoor inlet, middle and exit sensors in shield room will be processed as under -30℃. |

## 1.2 Display Code on Digital Tube of Outdoor Mainboard

| Error | Display on Digital Tube | Display on Indoor Unit | Error | Display on Digital Tube | Display on Indoor Unit |
|---|---|---|---|---|---|
| DC overvoltage protection | PH | E5 | Input overcurrent protection | PA | E5 |
| Module overheat protection | P8 | E5 | Jumper fault | C5 | No display |
| Current test circuit fault | Pc | E5 | Recharging circuit fault | PU | E5 |
| Module temperature sensor fault | P7 | E5 | High-pressure protection | E1 | E1 |
| Compressor overcurrent protection | P5 | E5 | Low-pressure protection | E3 | E3 |
| DC undervoltage protection | PL | E5 | Exhaust protection | E4 | E4 |
| Compressor startup failure | Lc | E5 | Compressor overload protection | H3 | E5 |
| PFC module protection | Hc | E5 | Communication fault (between indoor / outdoor unit and wired controller) | E6 | E6 |
| Drive resetting and stop | P0 | E5 | Outdoor ambient temperature sensor error | F4 | F4 |
| Protection of compressor against loss of synchronization | H7 | E5 | Indoor coil inlet temperature sensor error | F5 | F5 |
| Compressor protection against loss of phase | Ld | E5 | Indoor coil middle temperature sensor error | F6 | F6 |
| Inverter drive communication fault | P6 | E5 | Outdoor coil outlet temperature sensor error | F7 | F7 |
| IPM module protection | H5 | E5 | Exhaust temperature sensor error | F9 | F9 |

# 2 FLOW CHART OF TROUBLESHOOTING

## 2.1 High-pressure Protection

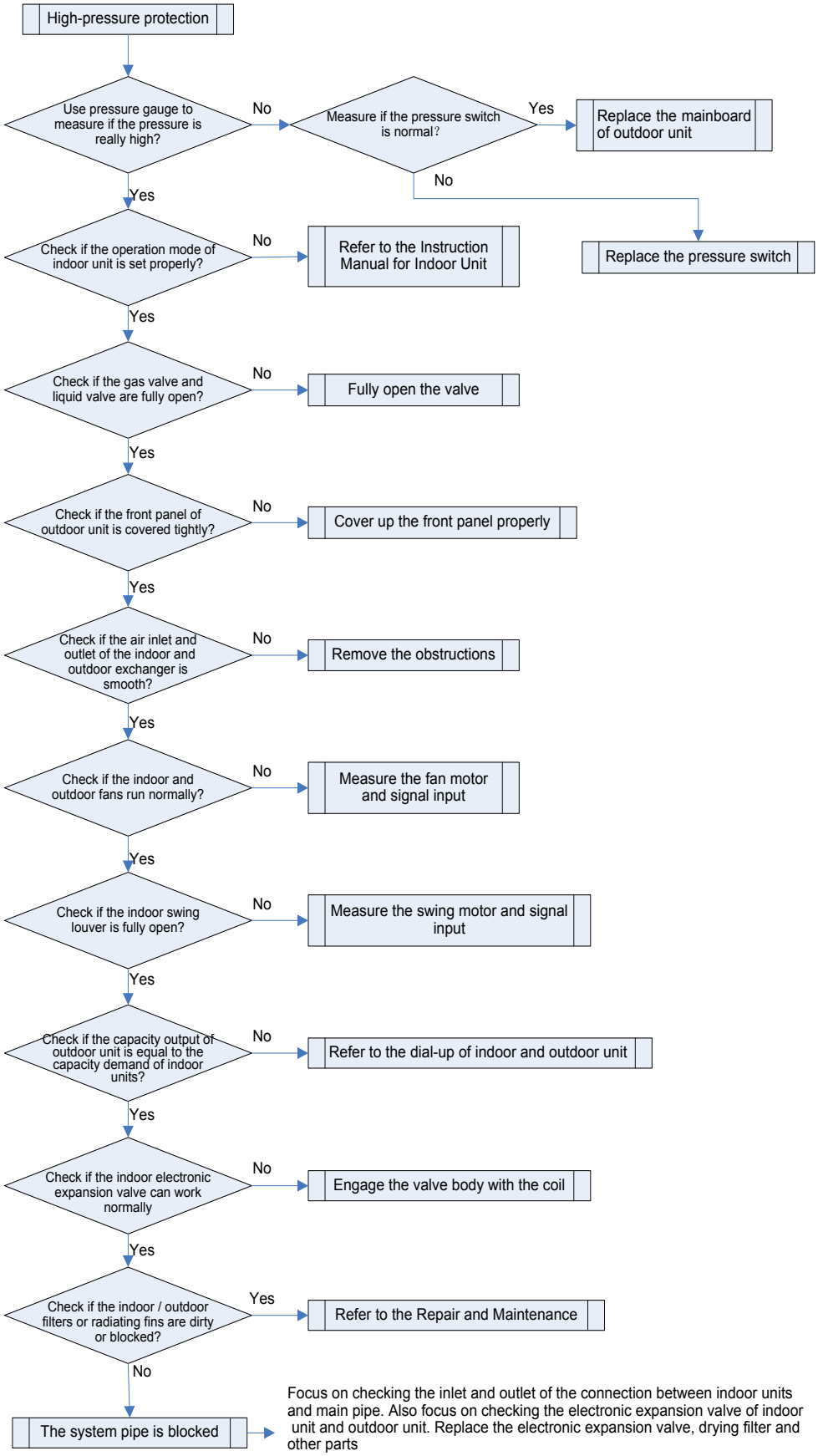

## 2.2 Low-pressure Protection

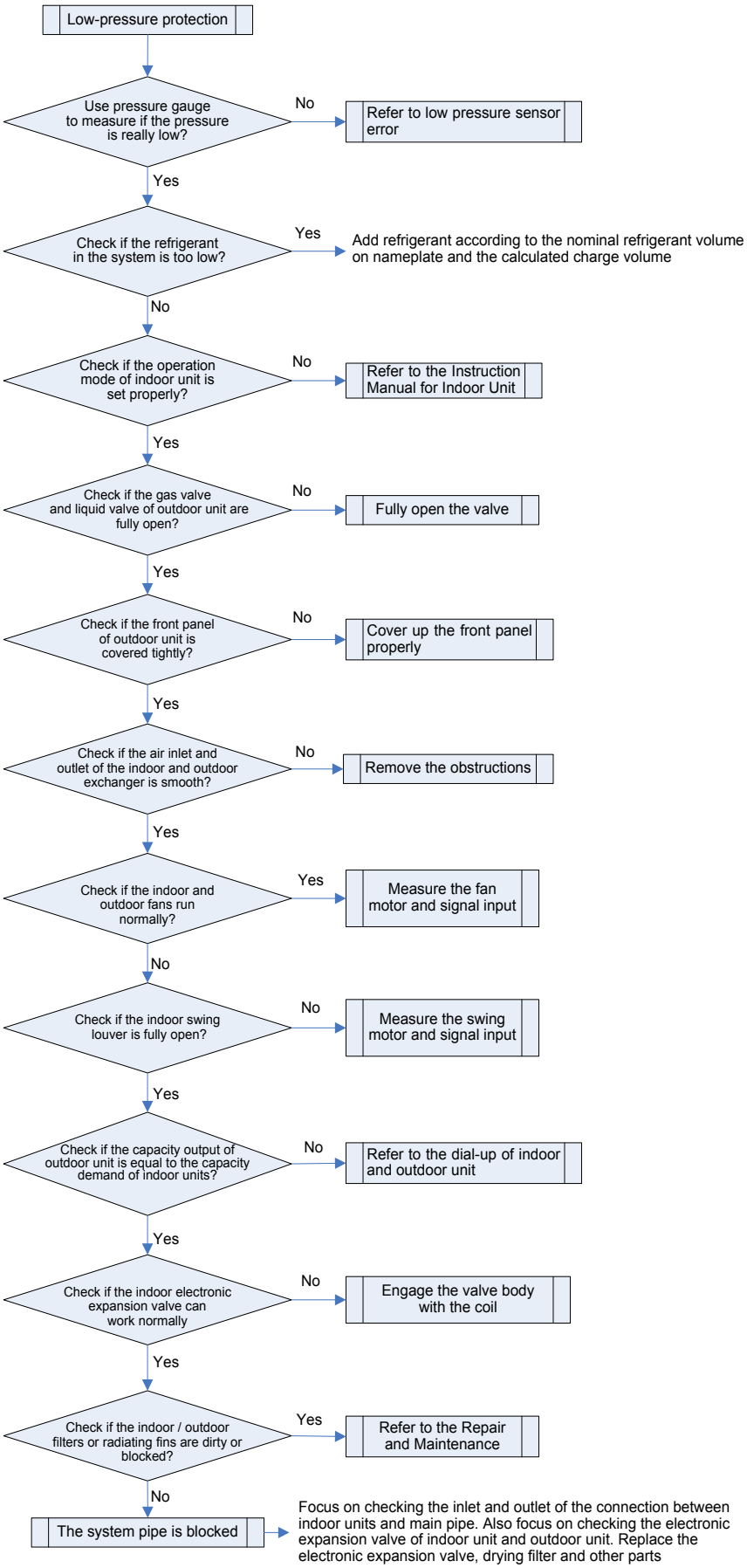

## 2.3 Exhaust Temperature Protection

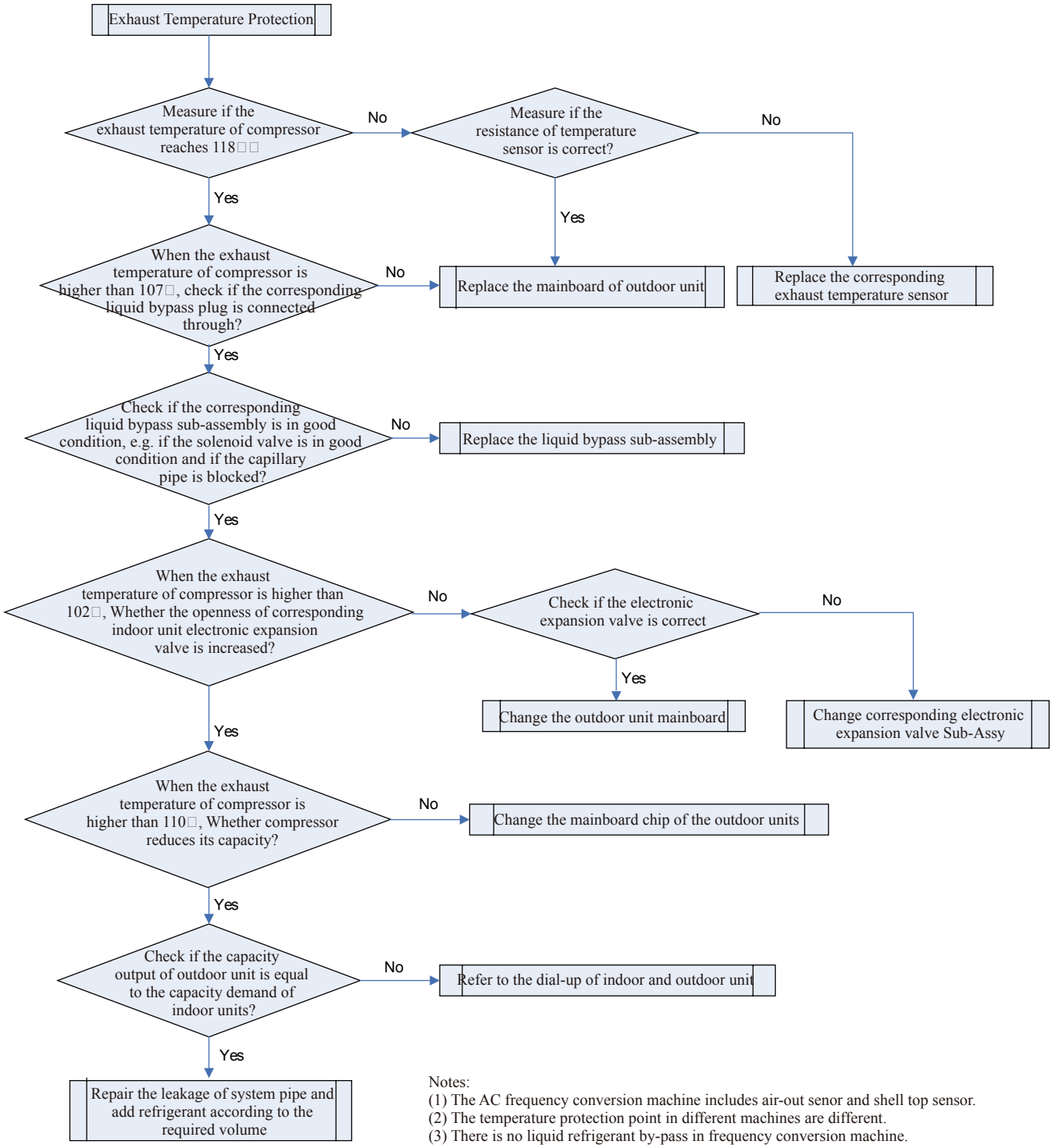


Notes:
(1) The AC frequency conversion machine includes air-out senor and shell top sensor.
(2) The temperature protection point in different machines are different.
(3) There is no liquid refrigerant by-pass in frequency conversion machine.

## 2.4 Compressor overcurrent protection

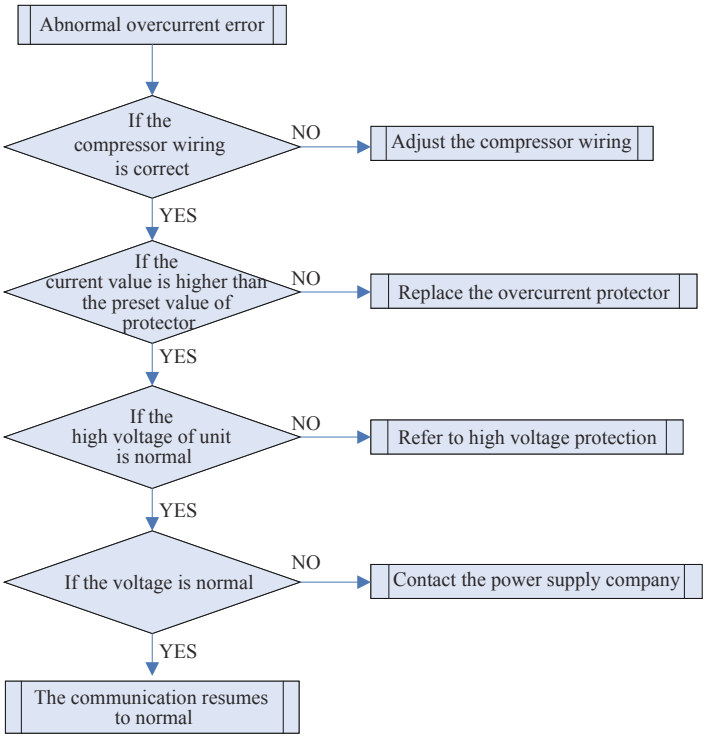


Upon AC inverter startup overcurrent, the indicator will display the current protection.

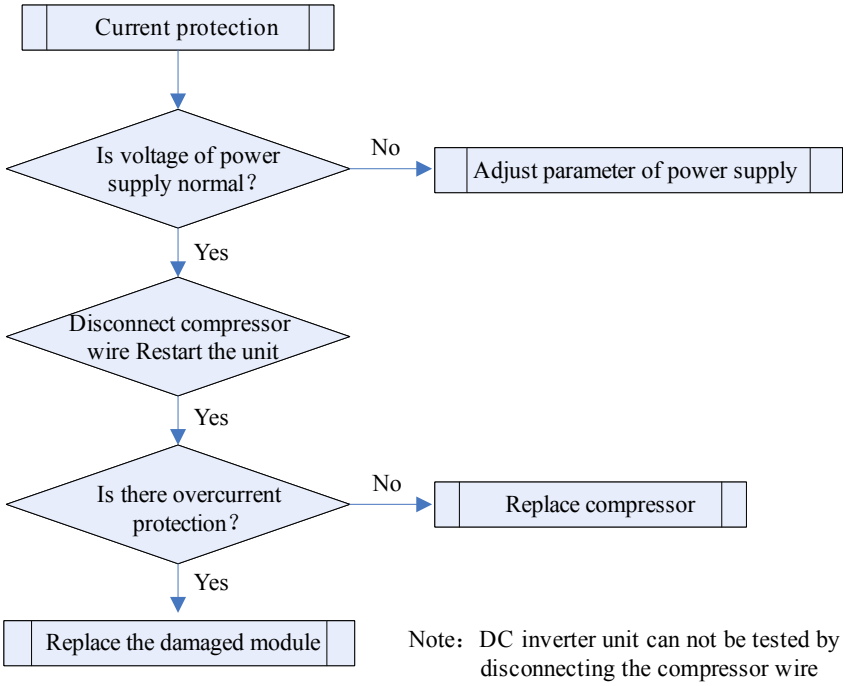


Note: DC inverter unit can not be tested by disconnecting the compressor wire

Overcurrent occurs in operation, i.e. the indicator will display the current protection just after startup.

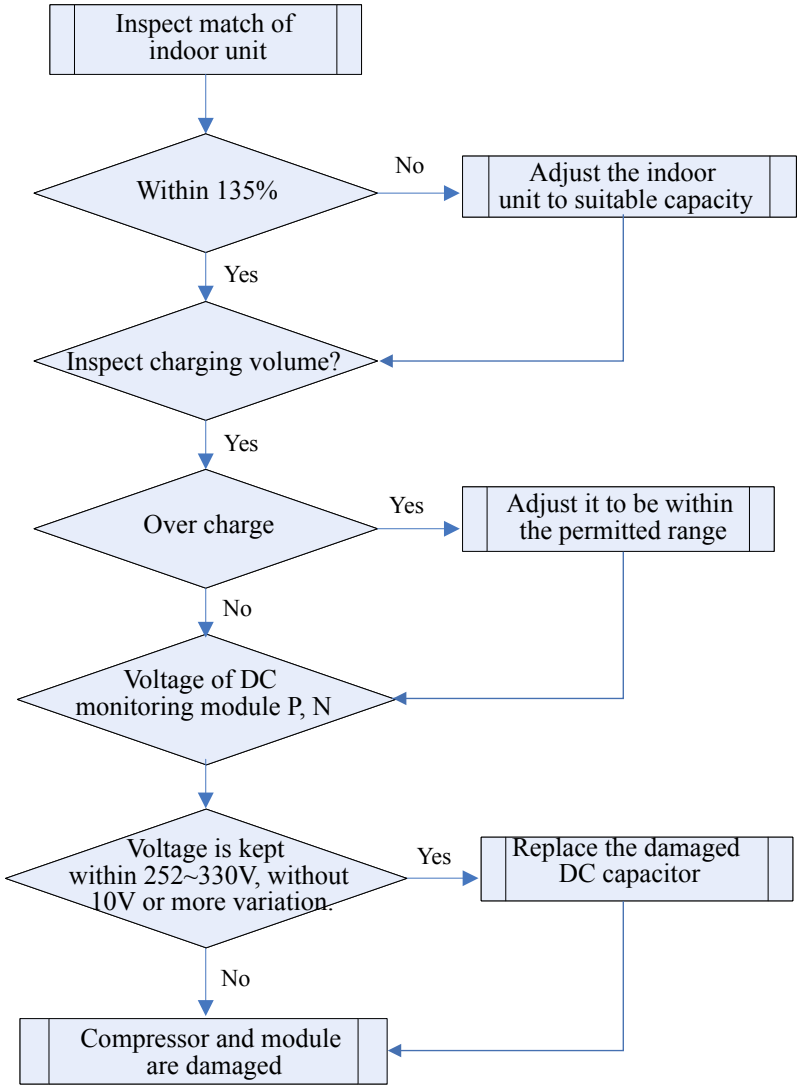

## 2.5 Communication error

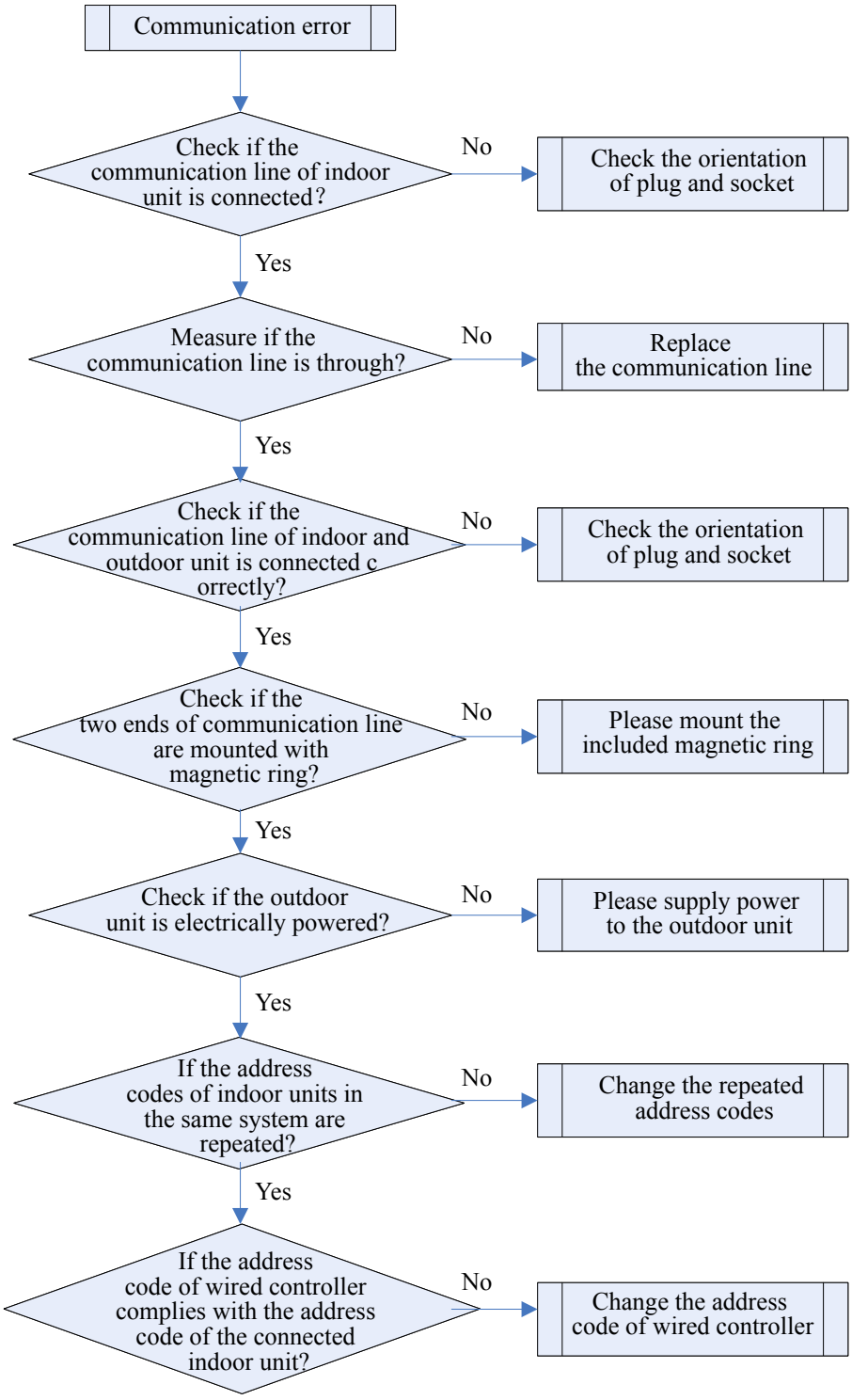

## 2.6 Water-full protection

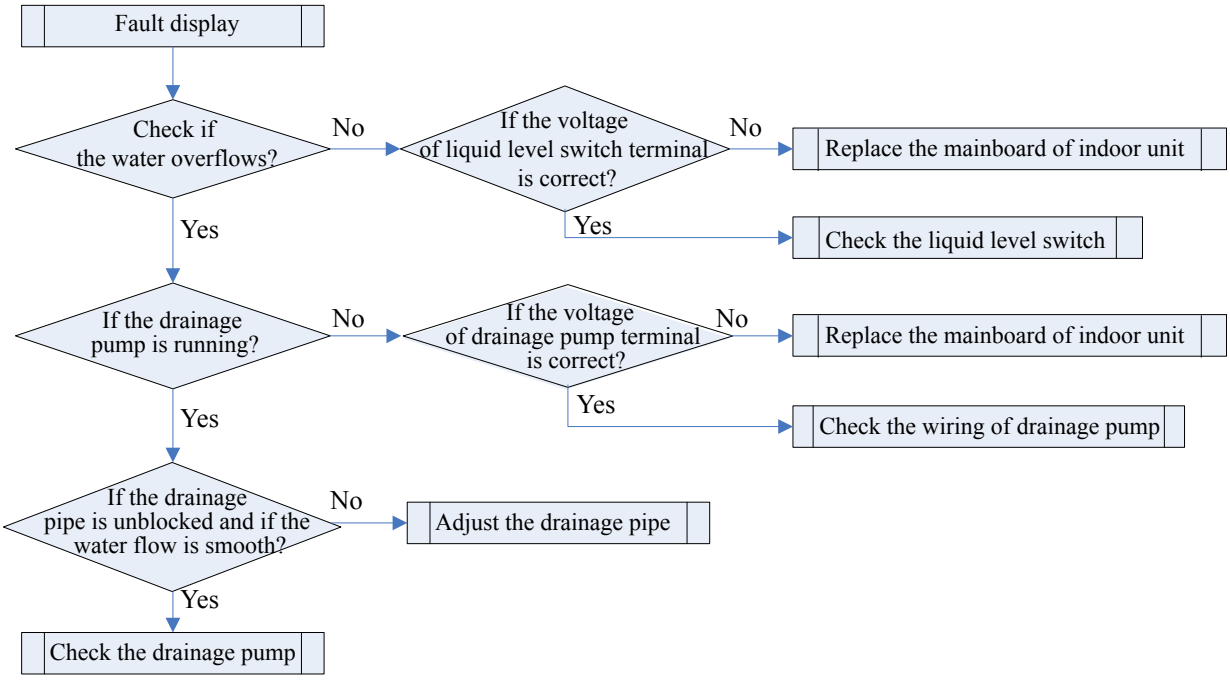


## 2.7 Error with room sensor, tube-inlet, tube middle and tube-exit sensor; error with room sensor, tube-inlet, tube middle and tube-exit sensor and exhaust / casing top sensor; error with the compressor bottom sensor

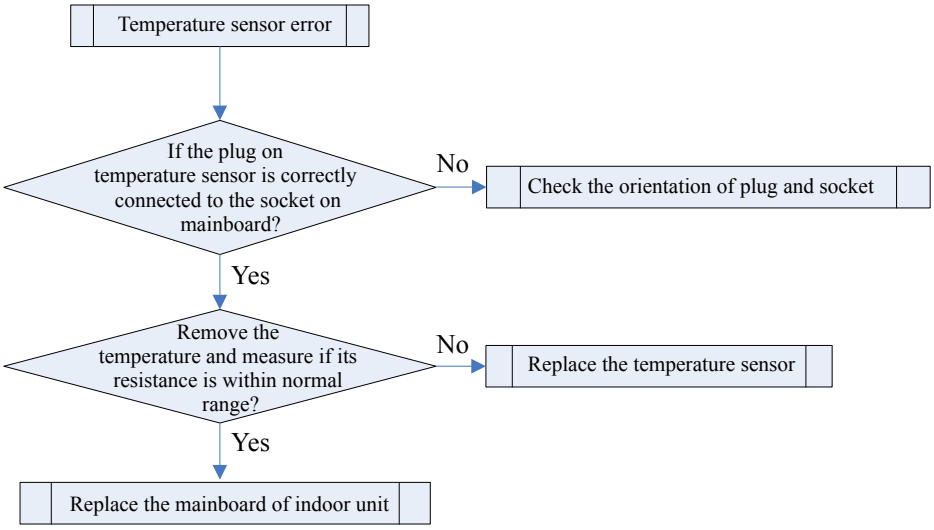

## 2.8 No energization to the unit and mainboard

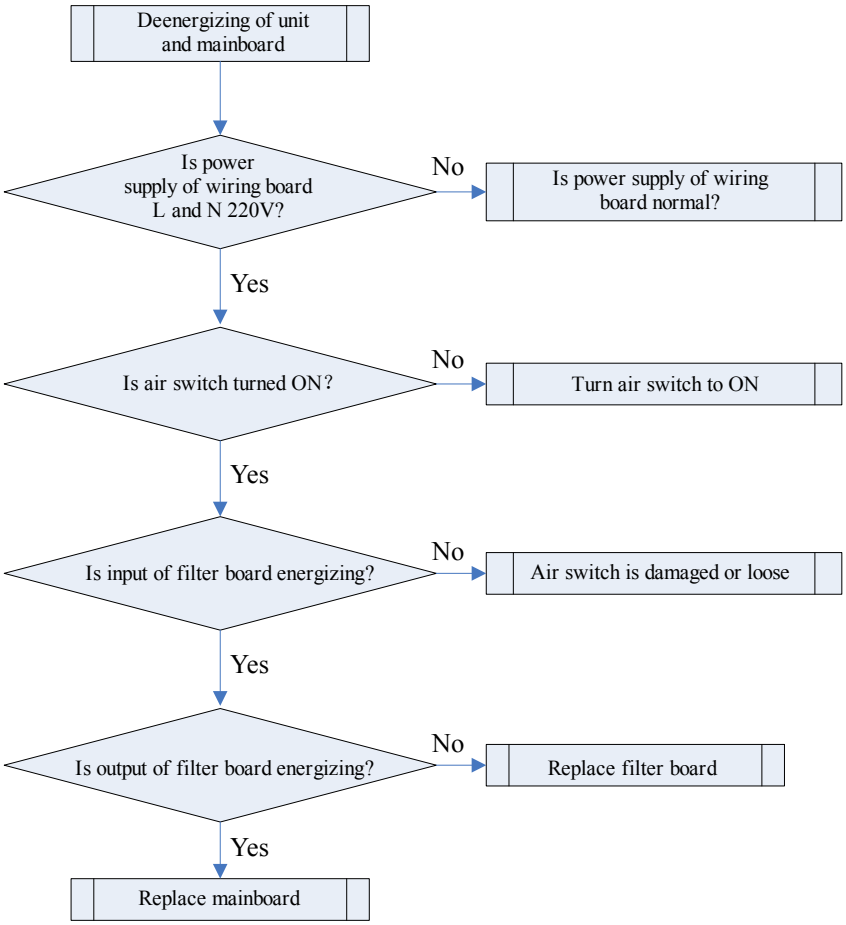

## 2.9 PFC Protection

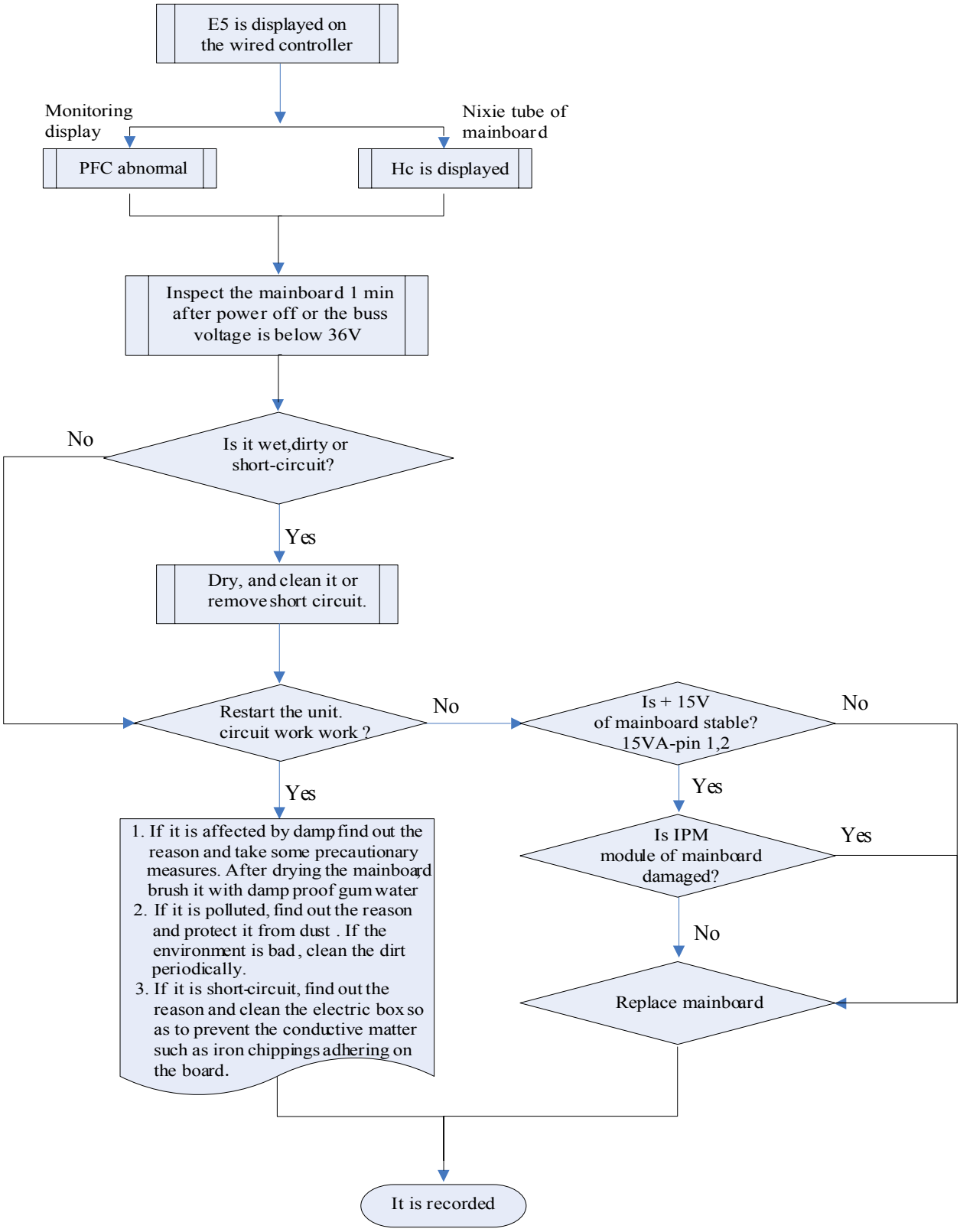

## 2.10 IPM Protecion

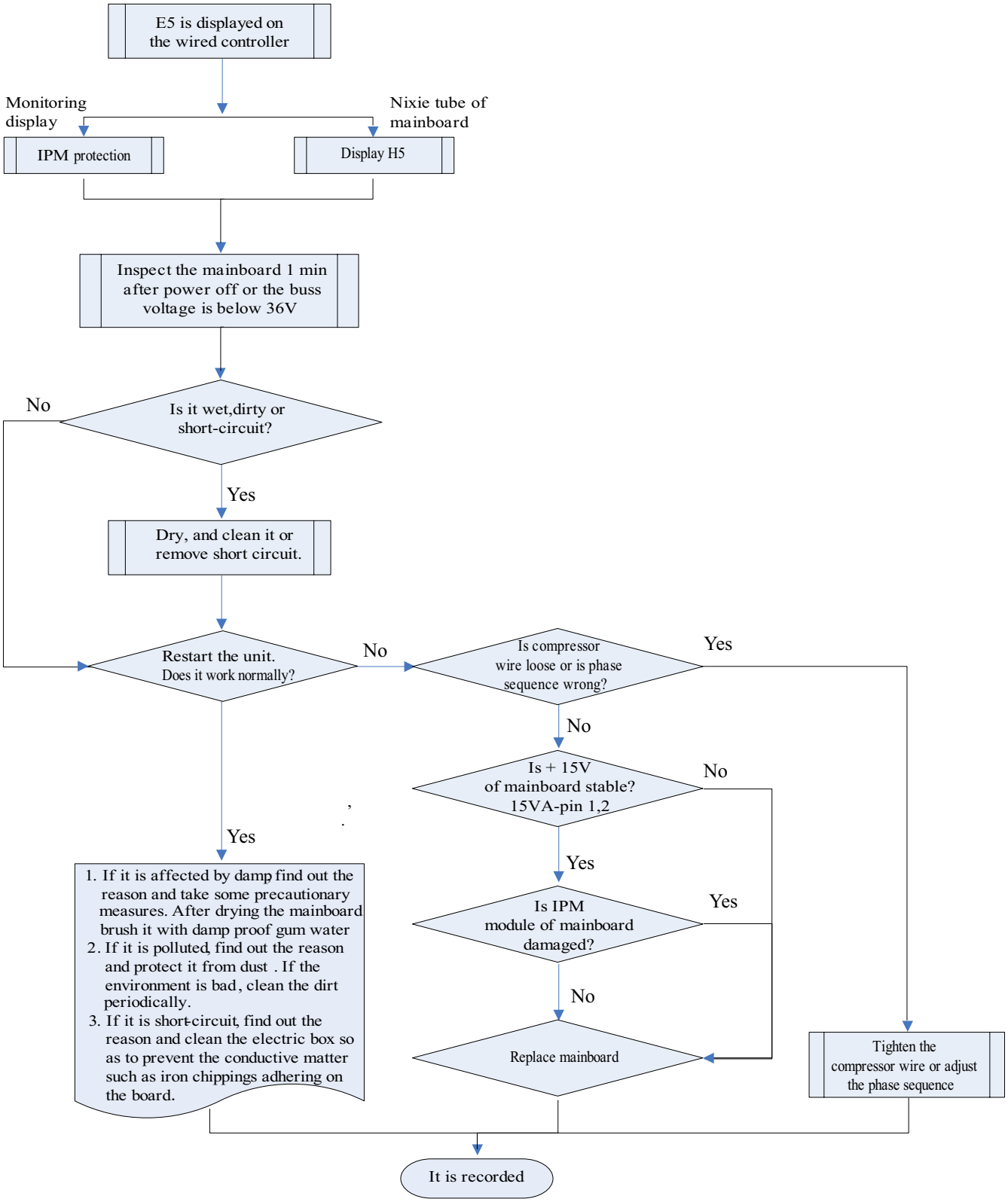

## 2.11 Trip

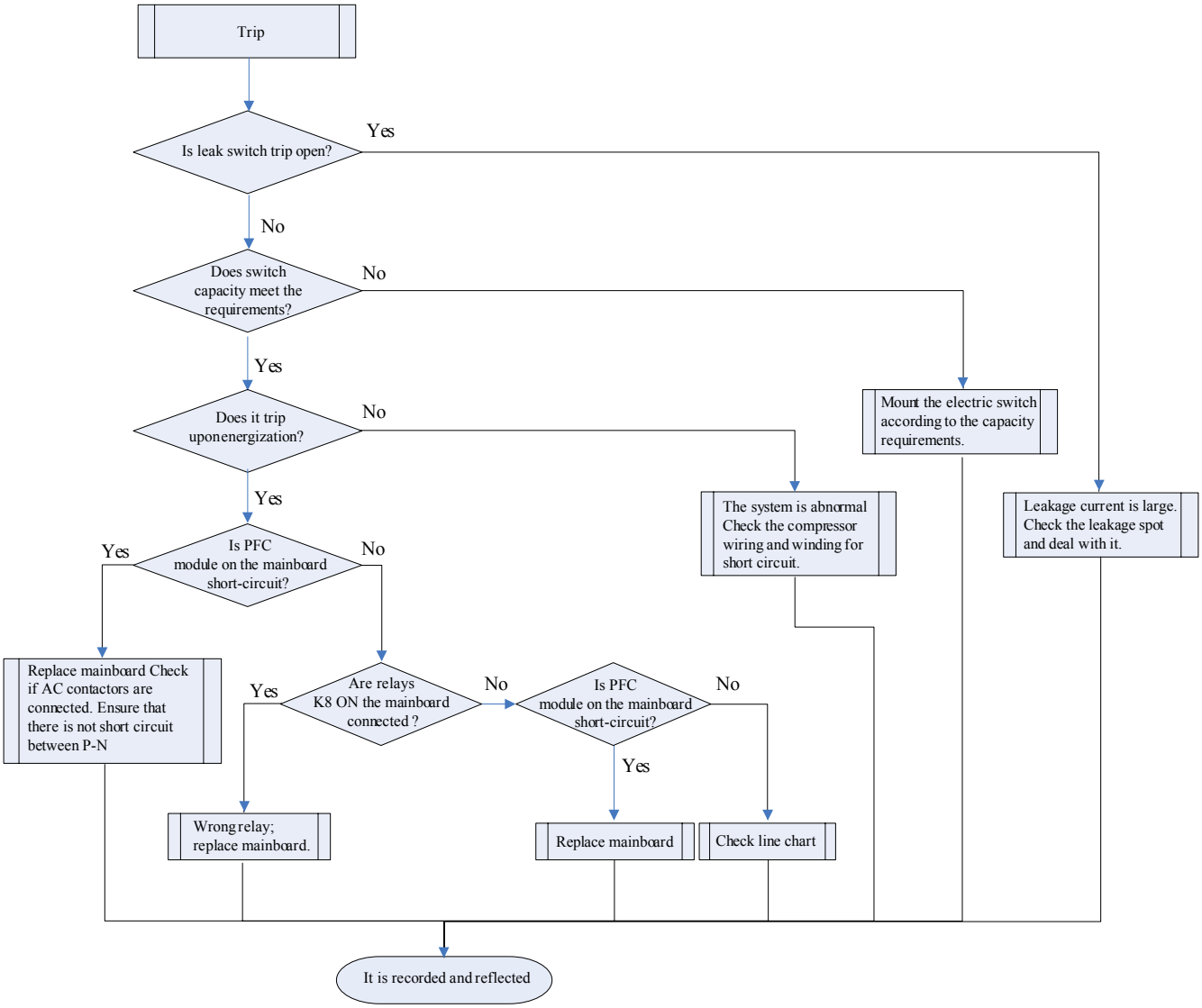
Trip
Is leak switch trip open?
Yes
No
Does switch capacity meet the requirements?
No
Yes
Mount the electric switch according to the capacity requirements.
Does it trip uponenergization?
No
Yes
The system is abnormal Check the compressor wiring and winding for short circuit.
Leakage current is large. Check the leakage spot and deal with it.
Is PFC module on the mainboard short-circuit?
Yes
No
Replace mainboard Check if AC contactors are connected. Ensure that there is not short circuit between P-N
Are relays K8 ON the mainboard connected ?
Yes
No
Is PFC module on the mainboard short-circuit?
No
Yes
Wrong relay; replace mainboard.
Replace mainboard
Check line chart
It is recorded and reflected

## 2.12 Superheat Protection of Radiator

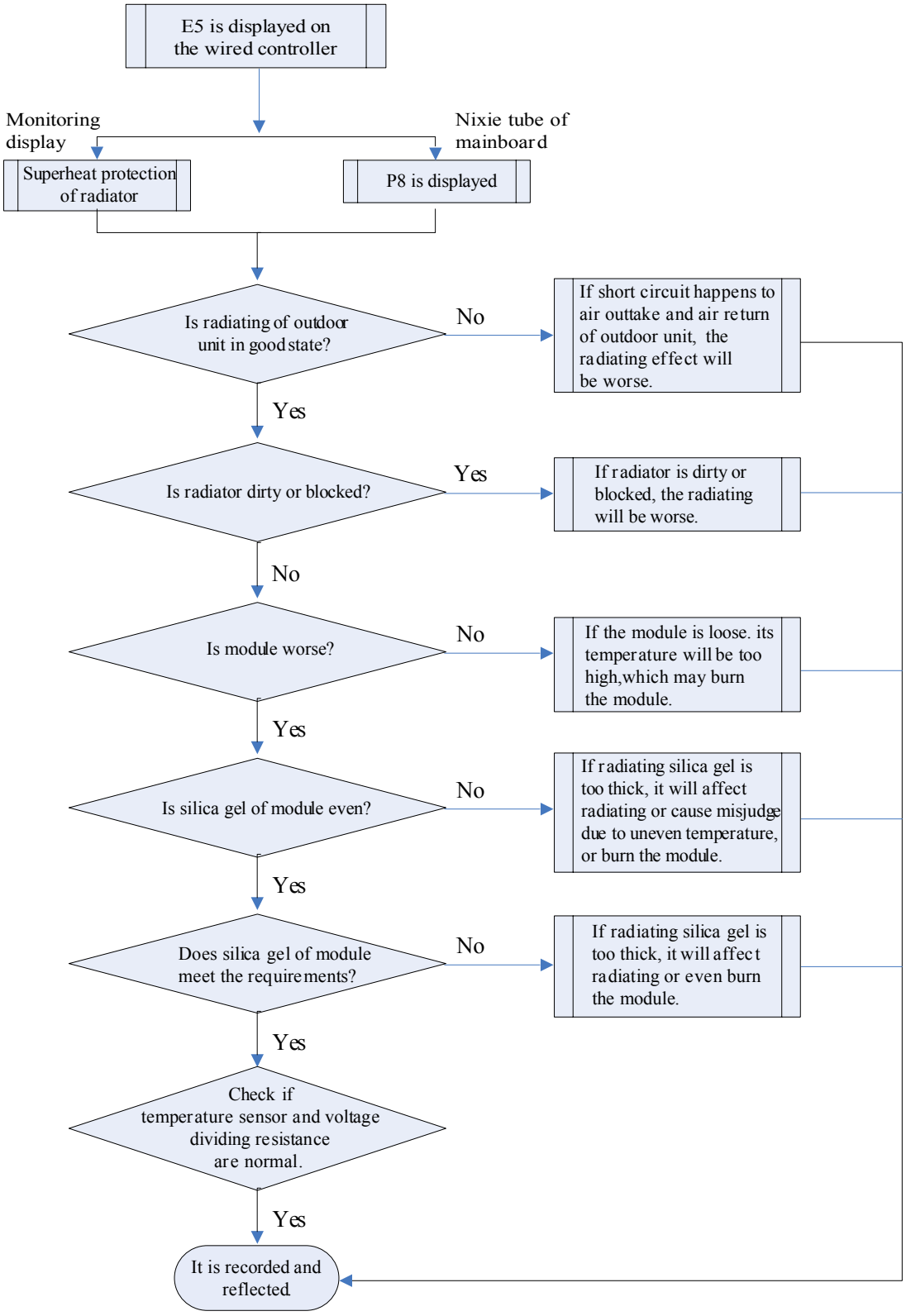

## 2.13 DC Overvoltage Protection

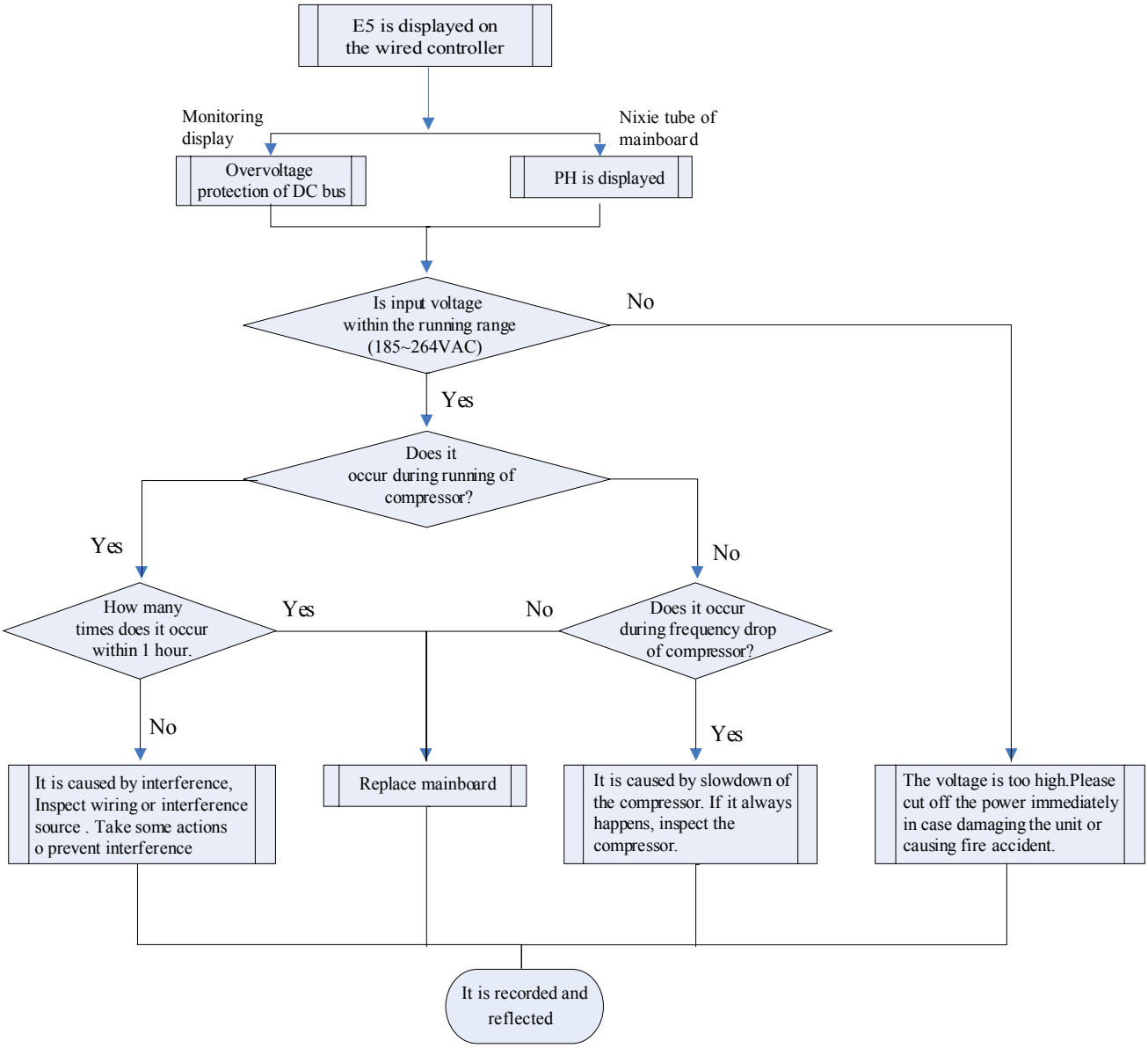

# 3 POWER DISTRIBUTION

## 3.1 Diagram of Power Distribution

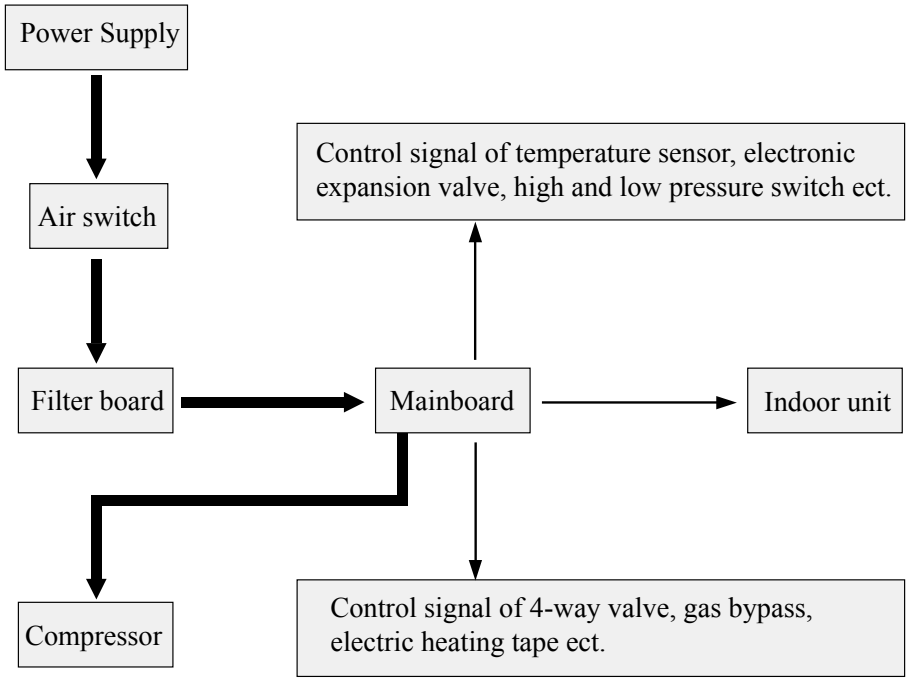


(The thick lien represents power line while thin line represents the control line.)

## 3.2 Introduction of Major Electrical Elements

| Name | Photo | Function Introduction |
|---|---|---|
| Filter board<br>It used for<br>GMV-Pd100W/NaB-K,<br>GMV-Pd120W/NaB-K,<br>GMV-Pd140W/NaB-K,<br>GMV-Pd160W/NaB-K, | | Main functions:<br>1) Filter the power interference and ensure the anti-interference ability of the unit under poor quality of power supply;<br>2) Inhibit the interference of the unit to the power supply and prevent the operation of unit from affecting other electric appliances like TV. |
| Filter board<br>It used for<br>GMV-Pd140W/NaB-M,<br>GMV-Pd160W/NaB-M, | 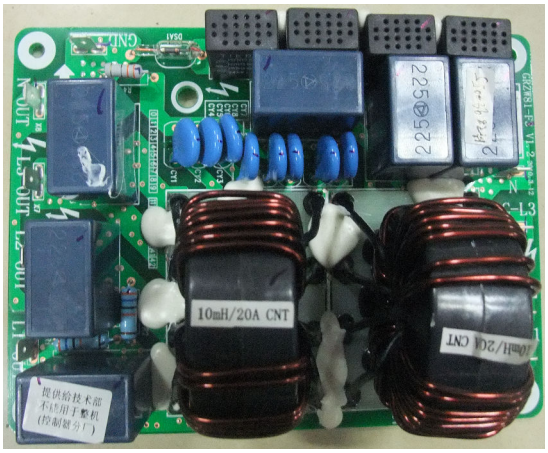 | |

| | | |
|---|---|---|
| Air switch<br>It used for<br>GMV-Pd100W/NaB-K,<br>GMV-Pd120W/NaB-K,<br>GMV-Pd140W/NaB-K,<br>GMV-Pd160W/NaB-K, | | For connecting and disconnecting the circuit of main loop, provided with overcurrent and short-circuit protection. |
| IPM module<br>It used for<br>GMV-Pd100W/NaB-K,<br>GMV-Pd120W/NaB-K,<br>GMV-Pd140W/NaB-K,<br>GMV-Pd160W/NaB-K, | 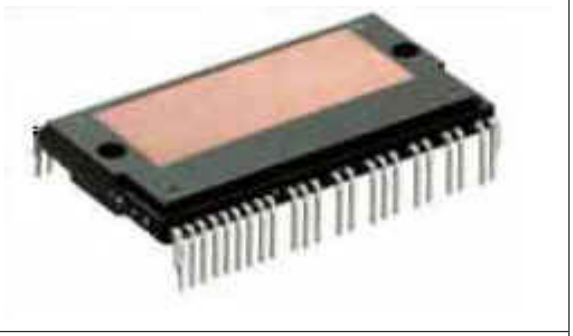 | The IPM module integrates 3 pairs of complementary IGBT tube and controls their connection and disconnection via PWM wave, so that the DC bus voltage is applied to different stator windings of the compressor in different time section and the current is hence generated on the stator. Meanwhile, magnetic field is induced on the rotor windings, thus to push the rotor and drive the compressor to run. |
| IPM module<br>It used for<br>GMV-Pd140W/NaB-M,<br>GMV-Pd160W/NaB-M, | 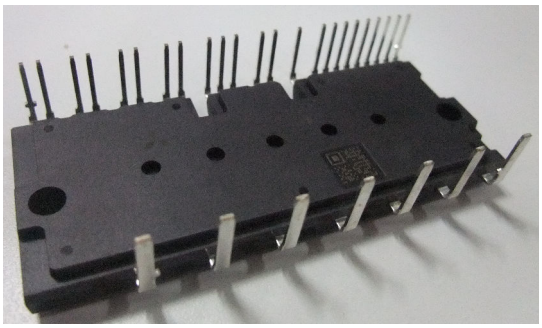 | |
| PFC module<br>It used for<br>GMV-Pd100W/NaB-K,<br>GMV-Pd120W/NaB-K,<br>GMV-Pd140W/NaB-K,<br>GMV-Pd160W/NaB-K, | 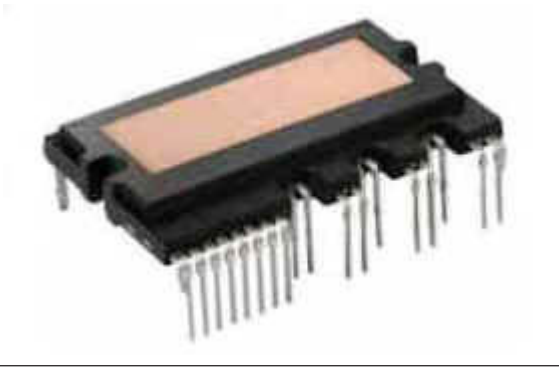 | The PFC module integrates 4 diode tubes and 2 MOS tubes. They convert the AC input power into DC power. Meanwhile, the connection and disconnection of MOS tube is controlled via PWM wave, thus to realize the voltage rise under the function of electric induction. |

### 3.3 Wiring diadram

> ⚠ **NOTE:**
> This drawing is just for reference; please always refer to the electric wiring stuck to the unit for actual wiring.

GMV-Pd100W/NaB-K,GMV-Pd120W/NaB-K,GMV-Pd140W/NaB-K

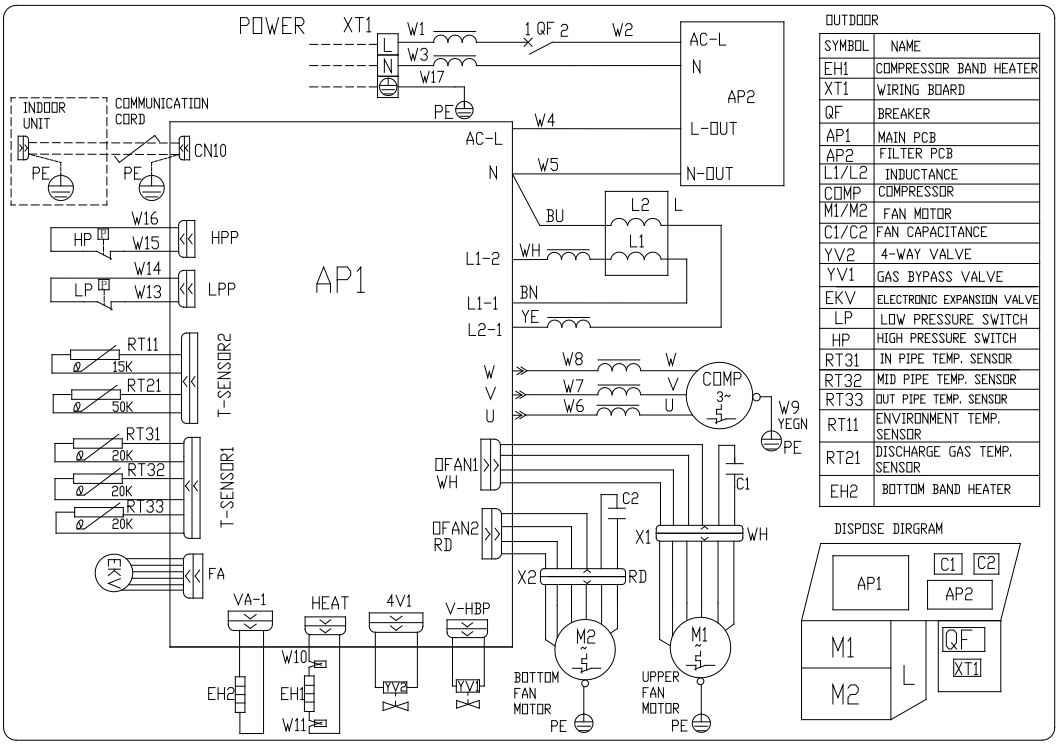


| SYMBOL | NAME |
|---|---|
| EH1 | COMPRESSOR BAND HEATER |
| XT1 | WIRING BOARD |
| QF | BREAKER |
| AP1 | MAIN PCB |
| AP2 | FILTER PCB |
| L1/L2 | INDUCTANCE |
| COMP | COMPRESSOR |
| M1/M2 | FAN MOTOR |
| C1/C2 | FAN CAPACITANCE |
| YV2 | 4-WAY VALVE |
| YV1 | GAS BYPASS VALVE |
| EKV | ELECTRONIC EXPANSION VALVE |
| LP | LOW PRESSURE SWITCH |
| HP | HIGH PRESSURE SWITCH |
| RT31 | IN PIPE TEMP. SENSOR |
| RT32 | MID PIPE TEMP. SENSOR |
| RT33 | OUT PIPE TEMP. SENSOR |
| RT11 | ENVIRONMENT TEMP. SENSOR |
| RT21 | DISCHARGE GAS TEMP. SENSOR |
| EH2 | BOTTOM BAND HEATER |

GMV-Pd160W/NaB-K

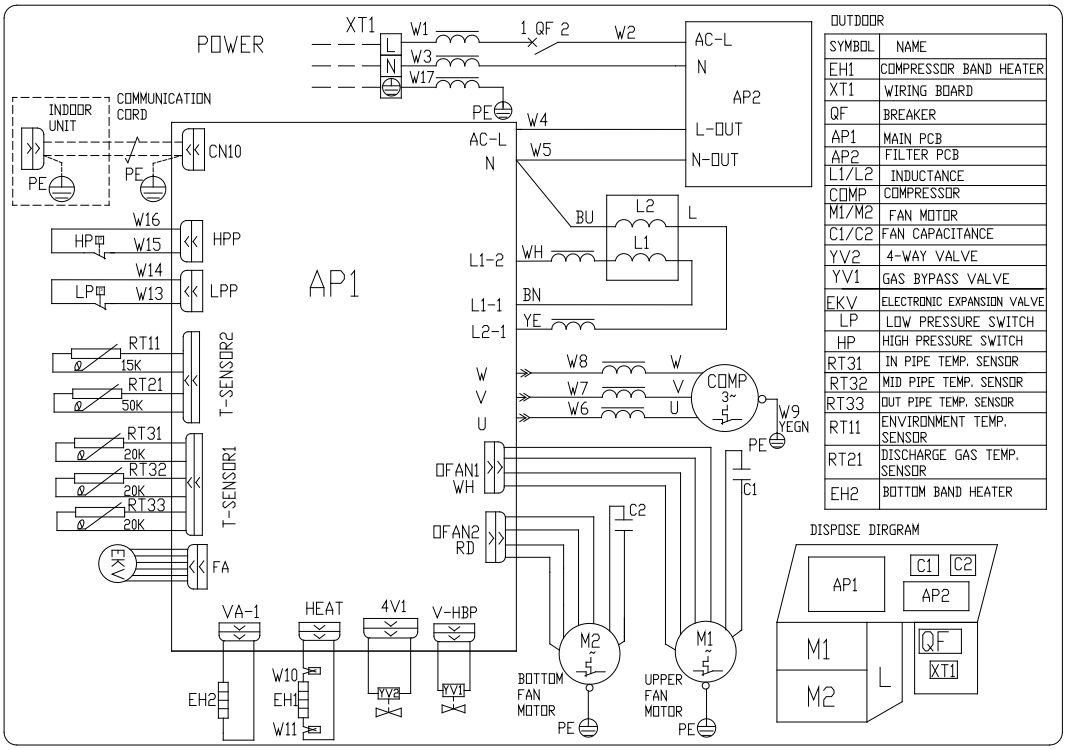


| SYMBOL | NAME |
|---|---|
| EH1 | COMPRESSOR BAND HEATER |
| XT1 | WIRING BOARD |
| QF | BREAKER |
| AP1 | MAIN PCB |
| AP2 | FILTER PCB |
| L1/L2 | INDUCTANCE |
| COMP | COMPRESSOR |
| M1/M2 | FAN MOTOR |
| C1/C2 | FAN CAPACITANCE |
| YV2 | 4-WAY VALVE |
| YV1 | GAS BYPASS VALVE |
| EKV | ELECTRONIC EXPANSION VALVE |
| LP | LOW PRESSURE SWITCH |
| HP | HIGH PRESSURE SWITCH |
| RT31 | IN PIPE TEMP. SENSOR |
| RT32 | MID PIPE TEMP. SENSOR |
| RT33 | OUT PIPE TEMP. SENSOR |
| RT11 | ENVIRONMENT TEMP. SENSOR |
| RT21 | DISCHARGE GAS TEMP. SENSOR |
| EH2 | BOTTOM BAND HEATER |

GMV-Pd140W/NaB-M,

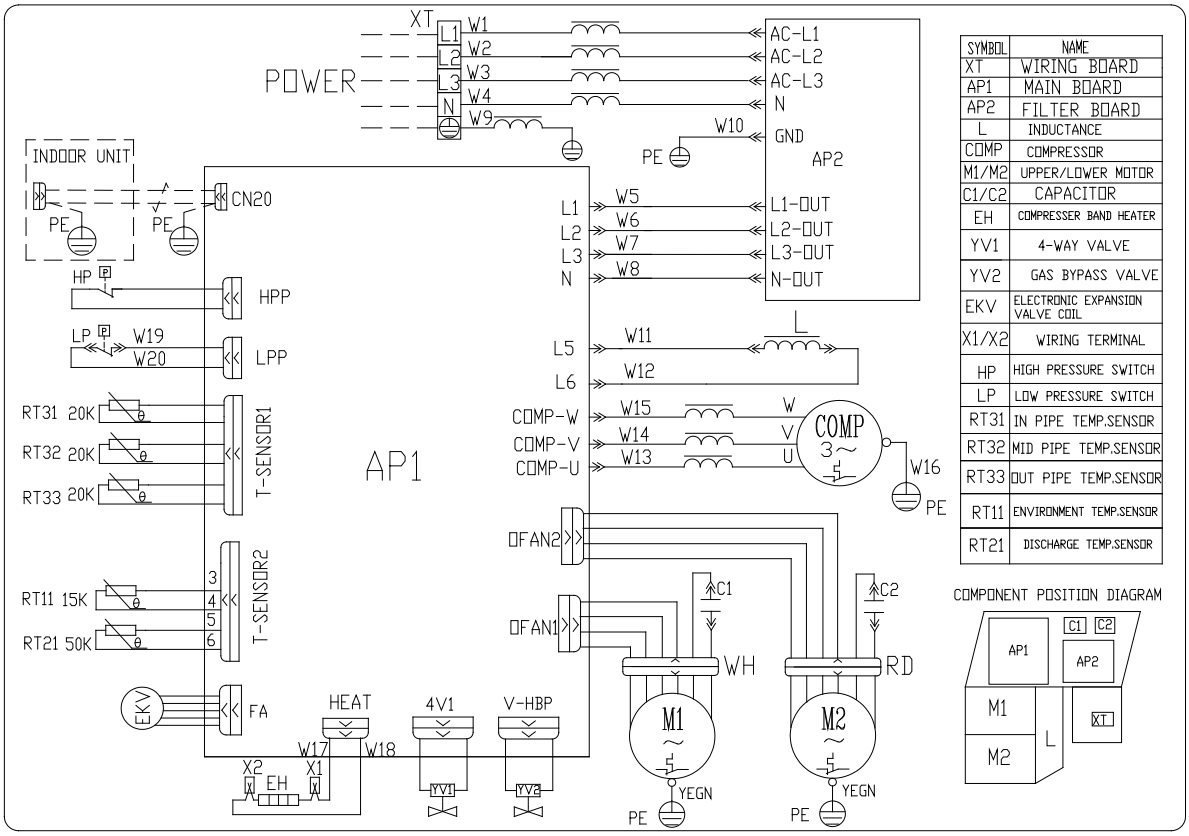


GMV-Pd160W/NaB-M,

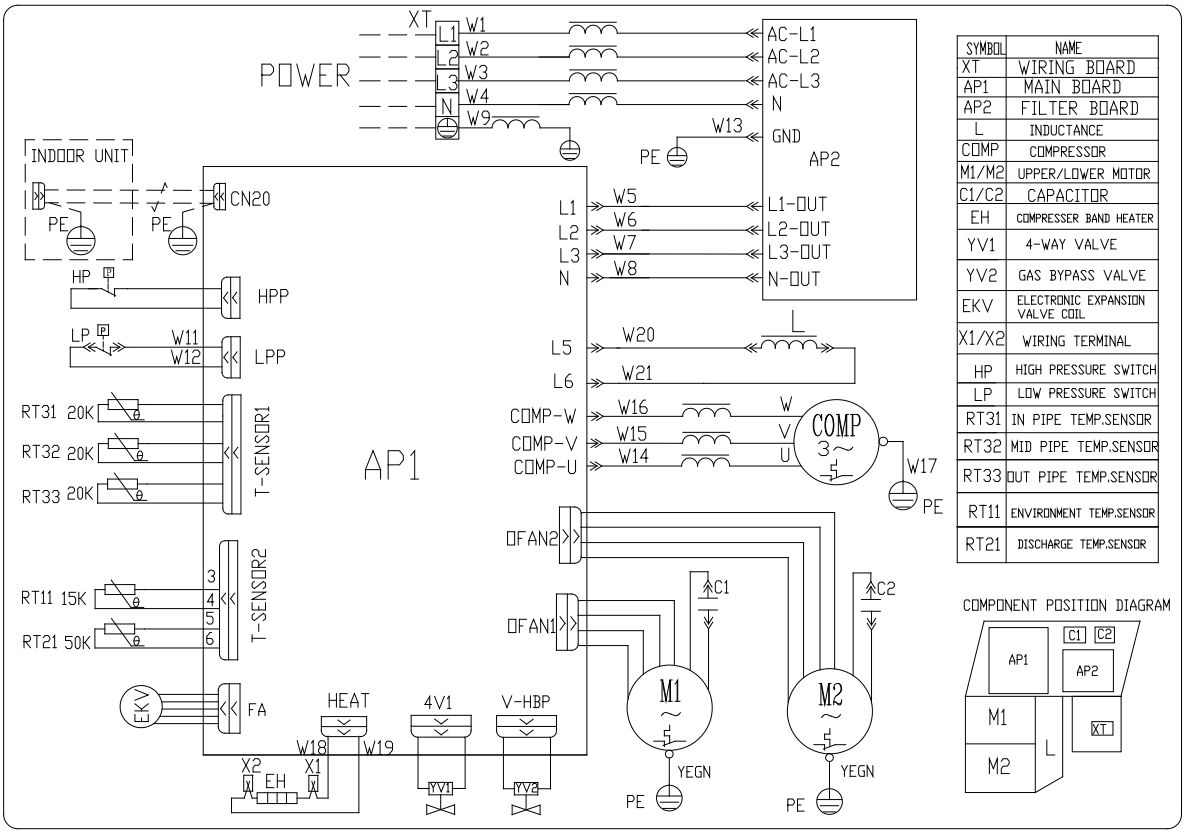

# 4 DISASSEMBLY AND ASSEMBLY PROCEDURE OF MAIN PARTS

| Disassembly and Assembly of the Front Panel | | |
|---|---|---|
| Remark: Be sure to cut off the power supply before disassembling the panel. | | |
| Procedures | Diagrams | Operating Instructions |
| 1. Disassemble the cover plate. | 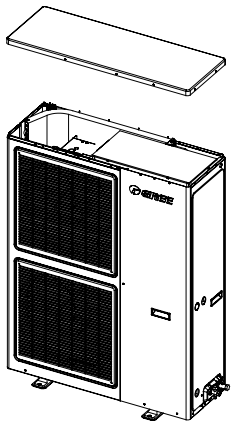 | 1) Remove the fixed screws on the top cover plate by using a screwdriver;<br>2) Raise up the top cover upward and place it on the floor horizontally. |
| 2. Dismount the front panel. | 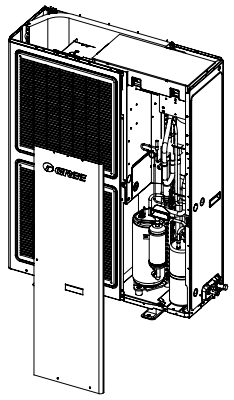 | 1) Remove the fixed screws on the front panel by using a screwdriver;<br>2) Remove the front panel and place it on the floor horizontally. |
| 3. Dismount the grille. | 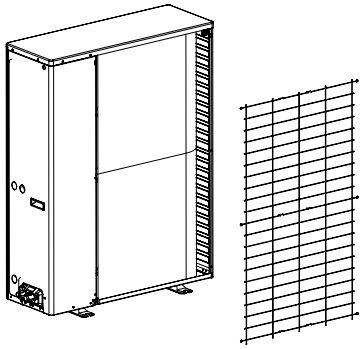 | 1) Remove the fixed screws on the grill by using a screwdriver;<br>2) Remove the grille and place it on the floor horizontally. |
| 4. Dismount the back panel. | 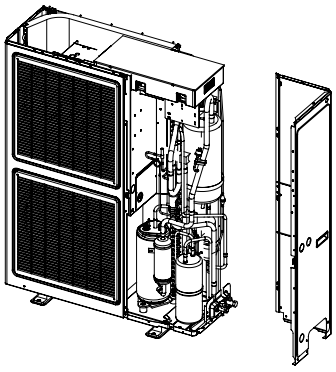 | 1) Remove the fixed screws on the back panel by using a screwdriver; (including the fixed screws on the valve holder);<br>2) Remove the back panel. |

| Disassembly and Assembly of Motor and Fan Blades | | |
|---|---|---|
| Remark: Be sure to cut off power supply before disassembling motor and fan blades | | |
| Procedures | Dirgrams | Operating Introductions |
| 1. Disassemble the front grille | 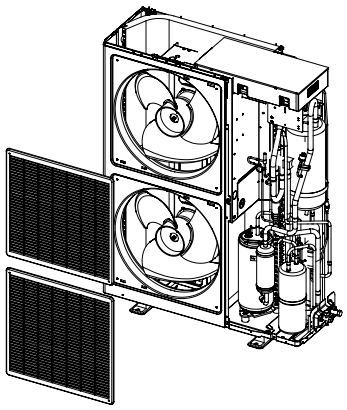 | 1) Remove the fixed screws on the front grille by using a screwdriver;<br>2) Remove the grille. |
| 2. Disassemble the outer casing. | 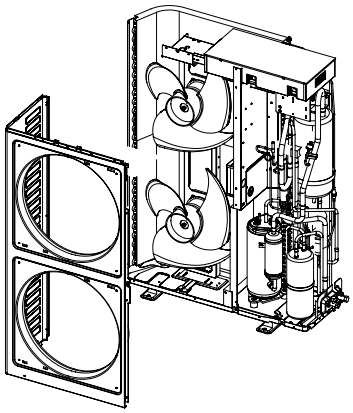 | 1) Remove the fixed screws on outer casing by using a screwdriver;<br>2) Remove the outer casing and place it on the floor horizontally. |
| 3. Disassemble the fan blades | 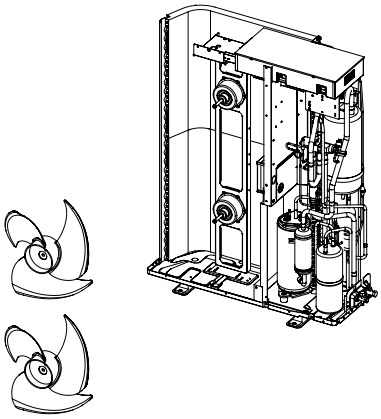 | 1) Remove the fixed screws on the fan blades by using a spanner;<br>2) Remove the fan blades and place them on the floor horizontally. |
| 4. Disassemble the bad motor. | 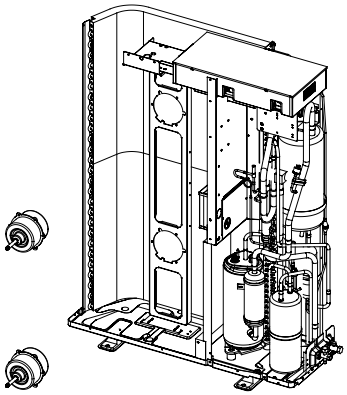 | 1) Remove the fixed screws on the motor by using a spanner;<br>2) Disconnect the power cord to the motor;<br>3) Take out the bad motor |

| | | |
|---|---|---|
| 5. Assemble the new motor. | 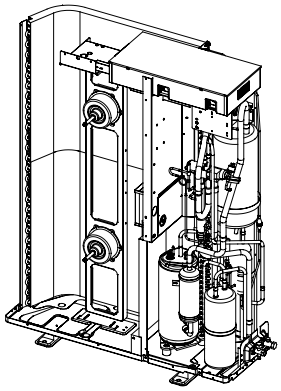 | 1) Replace a new motor and fix the screws tightly by using a spanner;<br>2) Connect the power cord to the motor. |
| 6. Assemble the whole unit. | 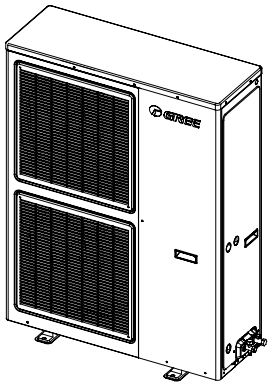 | Assemble the disassembled main parts as per the reverse disassembly order mentioned above. |

| Removal and Installation of Compressor | | |
|---|---|---|
| Remark: Before removing the compressor, make sure that there is no refrigerant inside the pipe system and that the power has been cut off. | | |
| Step | Illustration | Handling Instruction |
| 1. Remove the power cord | 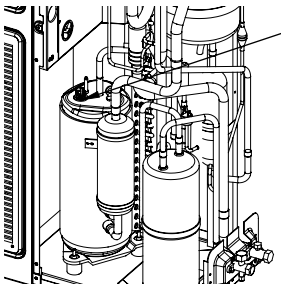 Mark the power cable colors and corresponding terminal codes during removal. | ●Use screwdriver to loosen the screws fixing the power cable.<br>●Pull out the power cable.<br>Note: When removing the power cable, please mark the power cable color and corresponding terminal, thus to avoid error during reinstallation. |
| 2. Loosen the nuts fixing the compressor onto foundation. | 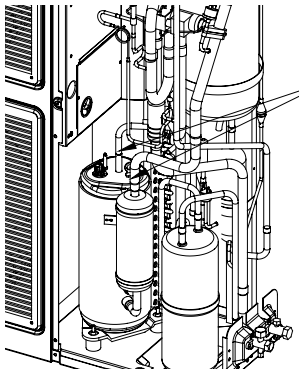 Heat by welding and pull the exhaust / suction pipe out. | ●Firstly, heat the connection pipe of compressor by welding;<br>●Then, pull out the connection pipe.<br>Note: During welding, take care not to let the flame burn other elements. |
| 3 Loosen the nuts fixing the compressor onto foundation. | 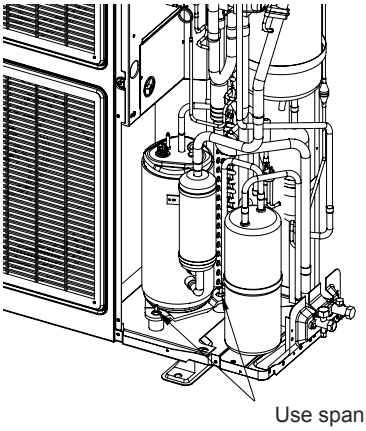 Use spanner to remove the bolts fixing the compressor. | ●Use spanner to loosen the nuts fixing the compressor onto the base seat |
| 4. Remove the compressor from chassis | 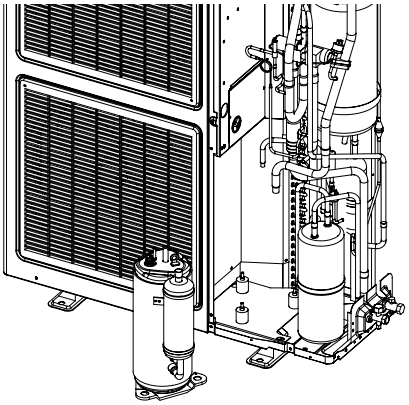 | ●Remove the compressor and replace it<br>Note: When replacing the compressor, take care not to touch the pipes and components beside. |

| | | |
|---|---|---|
| 5. Fix the new compressor to chassis | 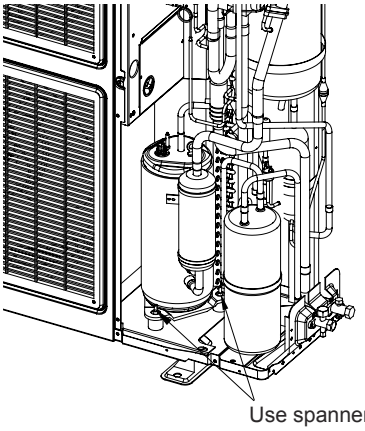 Use spanner to remove the bolts fixing the compressor. | ●Replace the compressor and tighten the nuts fixing onto the base seat. |
| 6. Connect the suction and exhaust pipe of compressor to system pipeline | 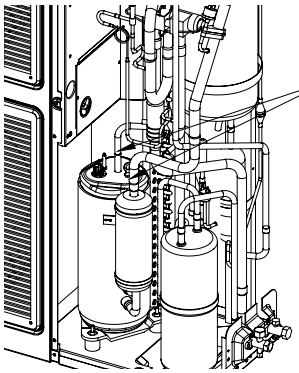 Replace and lock the compressor. Then, connect the pipe properly. | ●Weld the connection pipe of compressor and connect it to the compressor<br>Note: During welding, take care not to let the flame burn other elements. |
| 7. Connect the power cables of compressor correctly | 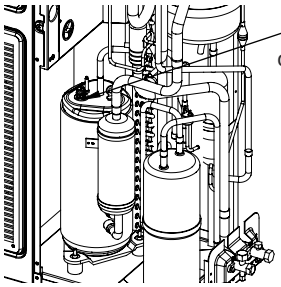 Mark the power cable colors and corresponding terminal codes during removal. | ●Use screwdriver to tighten the screws fixing the power cable.<br>●Connect the power cable correctly<br>Note: When connecting the power cable, please take care on the marking of power cable color and corresponding terminal code. |
| 8. Check and open the cover plate | 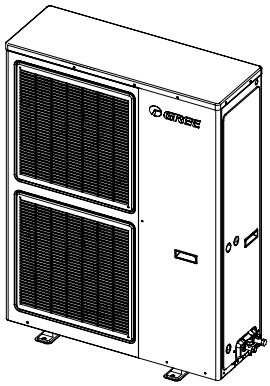 | ●Check if the pipe is connected properly;<br>●Check if the pipe is connected properly;<br>●If no problem, close the front and back cover plate. |

| Disassembly and Assembly of 4-way valve | | |
|---|---|---|
| Remark: Before removing the compressor, make sure that there is no refrigerant inside the pipe system and that the power has been cut off. | | |
| Step | Illustration | Handling Instruction |
| 1.Remove the Magnet Coil of 4-way valve. | 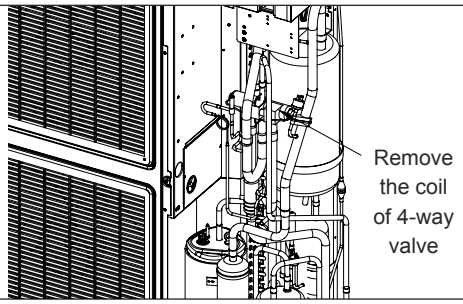 | ●Firstly, remove the coil of 4-way valve. |
| 2. Disconnect the 4-way valve from the pipe | 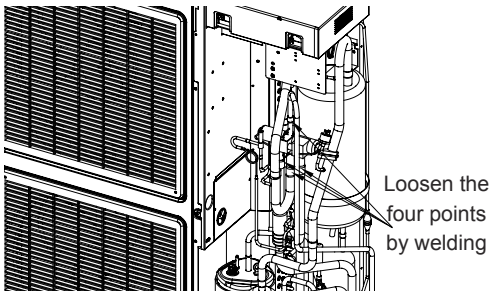 | ●Loosen the four joints on 4-way valve sub-assembly by welding; then, pull out the connection pipe. Note: During welding, take care not to let the flame burn other elements. |
| 3. Replace the 4-way valve and weld the 4-way valve to connection pipe | 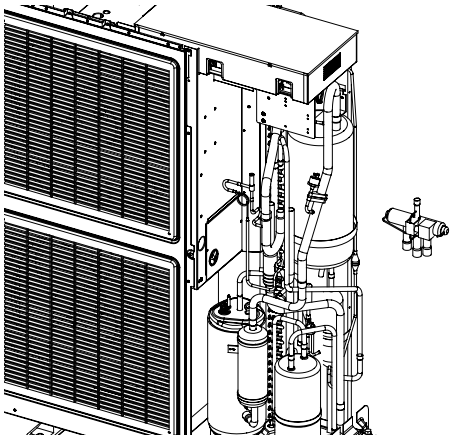 | ●Replace the 4-way valve and then weld the four joints on 4-way valve sub-assembly. Replace the 4-way valve and then weld the four joints on 4-way valve sub-assembly. |
| 4. Replace the 4-way valve and weld the 4-way valve to liquid bypass sub-assembly | 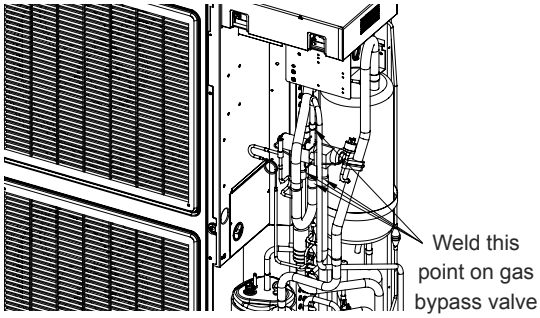 | ●Weld the joint between 4-way valve sub-assembly and liquid bypass sub-assembly. Note: During welding, take care not to let the flame burn other elements. |

| Removal and Installation of electronic expansion valve | | |
|---|---|---|
| Remark: Before removing the compressor, make sure that there is no refrigerant inside the pipe system and that the power has been cut off. | | |
| Step | Illustration | Handling Instruction |
| 1. Disconnect the electronic expansion valve from connection pipe | 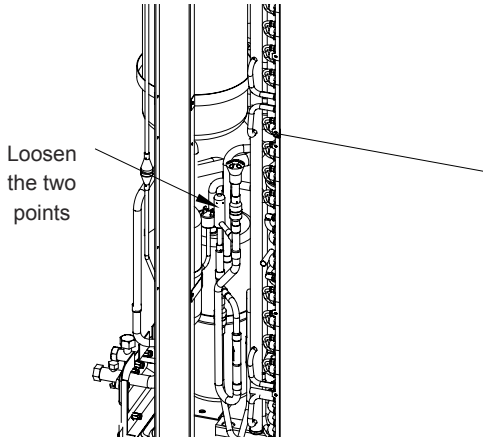 | ●Remove the coil of electronic expansion valve;<br>●Loosen the connection pipe of electronic expansion valve by welding; then pull out the connection pipe.<br>Note: During welding, take care not to let the flame burn other elements. |
| 2. Remove and replace the electronic expansion valve | 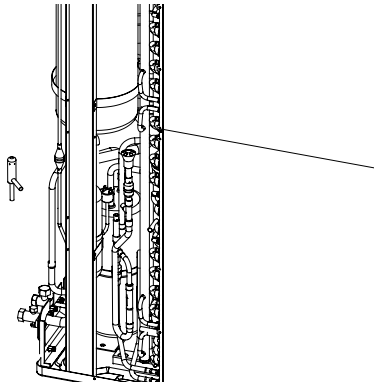 | ●Remove and replace the electronic expansion valve |
| 3. Weld the electronic expansion valve to connection pipe | 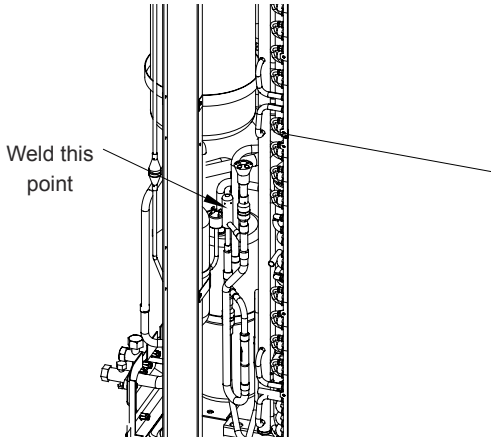 | ●Weld the connection pipe of electronic expansion valve.<br>Note: During welding, take care not to let the flame burn other elements. |

| Removal and Installation of Oil Separator | | |
|---|---|---|
| Remark: Before removing the compressor, make sure that there is no refrigerant inside the pipe system and that the power has been cut off. | | |
| Step | Illustration | Handling Instruction |
| 1. Disconnect the oil separator from the connection pipe | 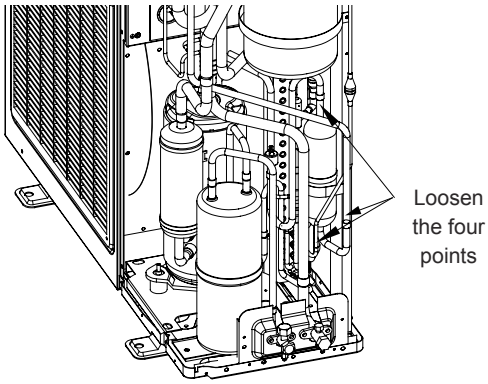 | ●Loosen the three joints on oil separator sub-assembly by welding; then, pull out the connection pipe. Note: During welding, take care not to let the flame burn other elements. |
| 2 Loosen the screws fixing the oil separator | 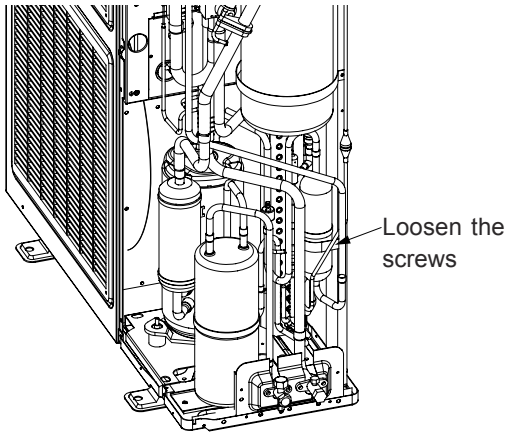 | ●Use screwdriver to loosen the screws fixing the oil separator. |
| 3. Remove the oil separator and replace it | 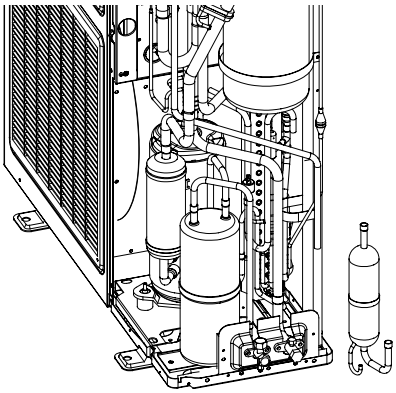 | ●Remove the oil separator and replace it |
| 4. Tighten the screws fixing the oil separator | 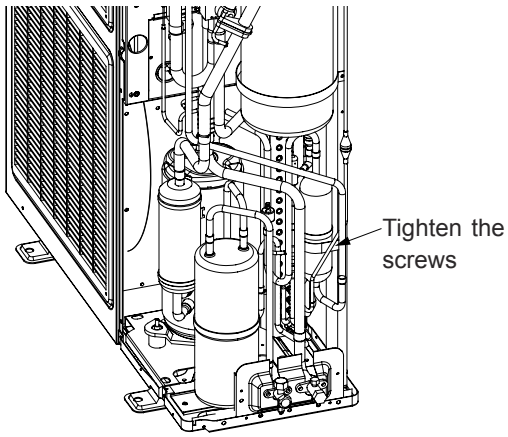 | ●Use screwdriver to tighten the screws fixing the oil separator. |

| | | |
|---|---|---|
| 5. Weld the oil separator to the connection pipe | 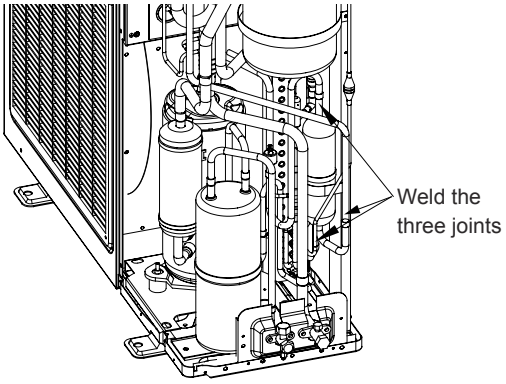 | ●Weld the three joints on oil separator sub-assembly.<br>Note: During welding, take care not to let the flame burn other elements. |

## 5 EXPLODED VIEWS AND PART LIST

GMV-Pd100W/NaB-K,GMV-Pd120W/NaB-K,GMV-Pd140W/NaB-K,GMV-Pd160W/NaB-K

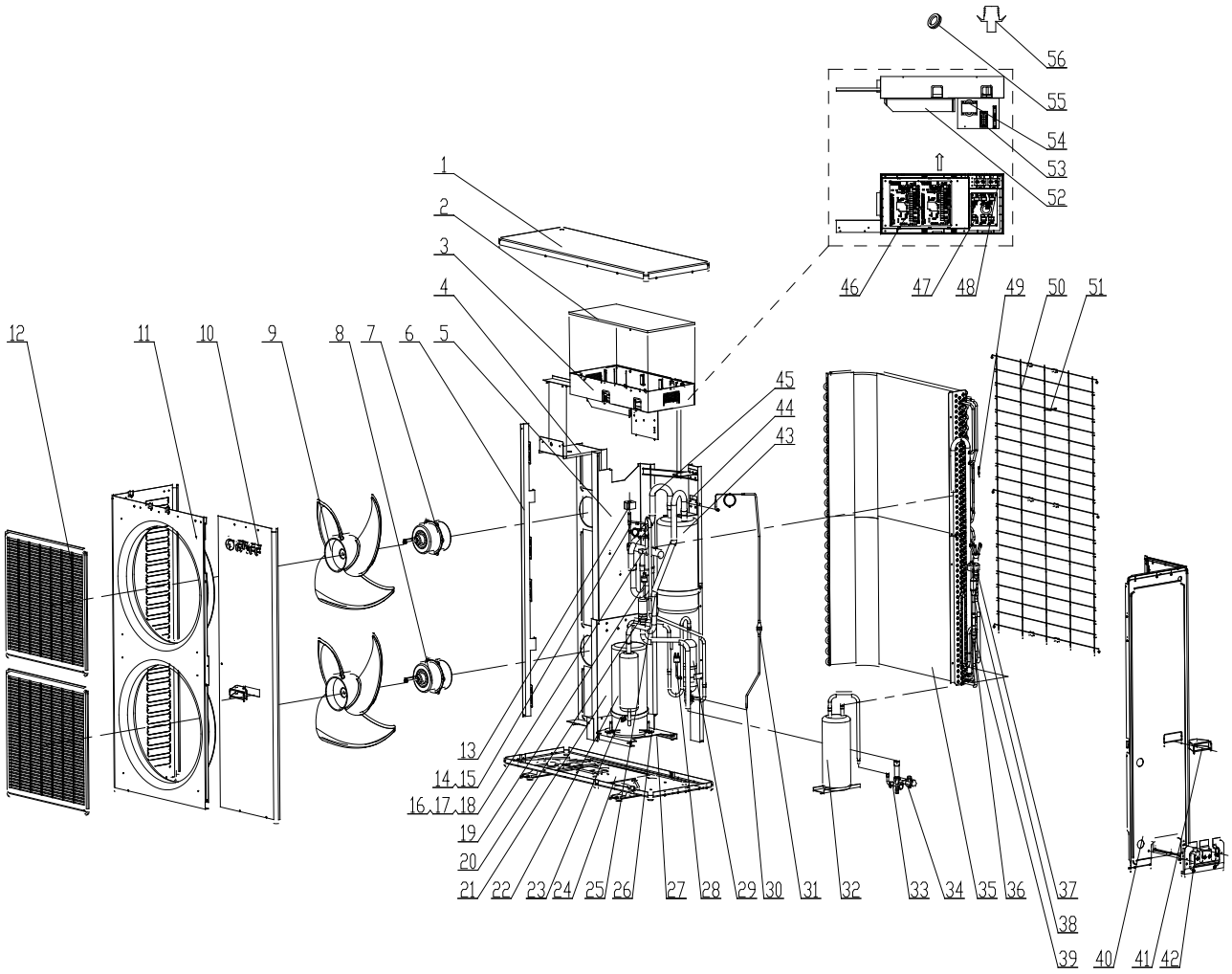


GMV-Pd100W/NaB-K for CN850W0072,GMV-Pd120W/NaB-K for CN850W0012 ,GMV-Pd140W/NaB-K for CN850W0022,Part List

| No. | Part Name | Code | Qty. |
|---|---|---|---|
| 1 | Top Cover | 01255013P | 1 |
| 2 | Electric Box Cover | 01424235 | 1 |
| 3 | Electric Box Assy | 01395174 | 1 |
| 4 | Motor Support Sub-Assy | 01804113 | 1 |
| 5 | Clapboard Sub-Assy 2 | 01244136 | 1 |
| 6 | Condenser support sub-assy | 01894119 | 1 |
| 7 | Fan Motor | 15013302 | 1 |
| 8 | Axial Flow Fan | 10338731 | 2 |
| 9 | Fan Motor | 1501330203 | 1 |
| 10 | Front Side Plate Sub-Assy | 01305430 | 1 |
| 11 | Cabinet | 01435436 | 1 |
| 12 | Front grill | 22414102 | 2 |
| 13 | Magnet Coil | 4304000403 | 1 |

| | | | |
|---|---|---|---|
| 14 | Gas by-pass valve sub-assy | 07334329 | 1 |
| 15 | Electromagnetic Valve | 43000054 | 1 |
| 16 | 4-way Valve Sub-Assy | 04144169 | 1 |
| 17 | 4-way Valve | 43000338 | 1 |
| 18 | Magnet Coil | 4300040029 | 1 |
| 19 | Pressure Protect Switch | 46020007 | 1 |
| 20 | Strainer | 07210037 | 1 |
| 21 | Clapboard Sub-Assy 1 | 01244111 | 1 |
| 22 | Compressor and fittings | 00205224 | 1 |
| 23 | electrical heater | 765152123 | 1 |
| 24 | Chassis Sub-assy | 01194706P | 1 |
| 25 | Inhalation Tube Sub-Assy | 04674170 | 1 |
| 26 | Compressor Gasket | 76815204 | 3 |
| 27 | Retaining Plate Sub-Assy | 01844134P | 1 |
| 28 | Pressure Protect Switch | 4602000902 | 1 |
| 29 | Oil Separator | 07228302 | 1 |
| 30 | Capillary Sub-Assy | 04104154 | 1 |
| 31 | StrainerA | 07210022 | 1 |
| 32 | High-pressure Accumulator | 07228739 | 1 |
| 33 | Cut-off Valve | 07103030 | 1 |
| 34 | Cut-off Valve | 07130209 | 1 |
| 35 | Condenser Assy | 0112415801 | 1 |
| 36 | Strainer | 07212121 | 2 |
| 37 | Electric expand valve fitting | 4300010822 | 1 |
| 38 | Electronic Expansion Valve | 07334102 | 1 |
| 39 | One way Valve | 04324001 | 1 |
| 40 | Rear Side Plate Sub-Assy | 01314171P | 1 |
| 41 | Handle | 26235253 | 3 |
| 42 | Valve Support Sub-Assy | 01715001 | 1 |
| 43 | Gas-liquid Separator | 07424104 | 1 |
| 44 | Support sub-assy | 01804200 | 1 |
| 45 | Connection Pipe | 05024915 | 1 |
| 46 | Main Board | 30226334 | 1 |
| 47 | Filter Board | 30228115 | 1 |
| 48 | Capacitor CBB61 | 33010010 | 1 |
| 49 | Temperature Sensor | 3900028004G | 1 |
| 50 | Rear Grill | 01475432 | 1 |
| 51 | Temperature Sensor | 3900028005G | 1 |
| 52 | Radiator | 49010007 | 1 |
| 53 | Terminal Board | 42011242 | 1 |
| 54 | Reactor | 43138004 | 1 |
| 55 | Drainage Plug | 06813401 | 3 |
| 56 | Drainage Connecter | 06123401 | 1 |

GMV-Pd160W/NaB-K for CN850W0032 Part List

| No. | Part Name | Code | Qty. |
|---|---|---|---|
| 1 | Top Cover | 01255013P | 1 |
| 2 | Electric Box Cover | 01424235 | 1 |
| 3 | Electric Box Assy | 01395173 | 1 |
| 4 | Motor Support Sub-Assy | 01804113 | 1 |
| 5 | Clapboard Sub-Assy 2 | 01244136 | 1 |
| 6 | Condenser support sub-assy | 01894119 | 1 |
| 7 | Fan Motor | 15704113 | 1 |
| 8 | Axial Flow Fan | 10338731 | 2 |
| 9 | Fan Motor | 1570411301 | 1 |
| 10 | Front Side Plate Sub-Assy | 01305430 | 1 |
| 11 | Cabinet | 01435436 | 1 |
| 12 | Front grill | 22414102 | 2 |
| 13 | Magnet Coil | 4304000403 | 1 |
| 14 | Gas by-pass valve sub-assy | 07334329 | 1 |
| 15 | Electromagnetic Valve | 43000054 | 1 |
| 16 | 4-way Valve Sub-Assy | 04144159 | 1 |
| 17 | 4-way Valve | 43000338 | 1 |
| 18 | Magnet Coil | 4300040029 | 1 |
| 19 | Pressure Protect Switch | 46020007 | 1 |
| 20 | Strainer | 07210037 | 1 |
| 21 | Clapboard Sub-Assy 1 | 01244111 | 1 |
| 22 | Compressor and fittings | 00205224 | 1 |
| 23 | electrical heater | 765152123 | 1 |
| 24 | Chassis Sub-assy | 01194706P | 1 |
| 25 | Inhalation Tube Sub-Assy | 04674170 | 1 |
| 26 | Compressor Gasket | 76815204 | 3 |
| 27 | Retaining Plate Sub-Assy | 01844134P | 1 |
| 28 | Pressure Protect Switch | 4602000902 | 1 |
| 29 | Oil Separator | 07228302 | 1 |
| 30 | Capillary Sub-Assy | 04104154 | 1 |
| 31 | StrainerA | 07210022 | 1 |
| 32 | High-pressure Accumulator | 07228739 | 1 |
| 33 | Cut-off Valve | 07130212 | 1 |
| 34 | Cut-off Valve | 07130209 | 1 |
| 35 | Condenser Assy | 0112415801 | 1 |
| 36 | Strainer | 07212121 | 2 |
| 37 | Electric expand valve fitting | 4300010822 | 1 |
| 38 | Electronic Expansion Valve | 07334102 | 1 |
| 39 | One way Valve | 04324001 | 1 |
| 40 | Rear Side Plate Sub-Assy | 01314171P | 1 |
| 41 | Handle | 26235253 | 3 |
| 42 | Valve Support Sub-Assy | 01715001 | 1 |
| 43 | Gas-liquid Separator | 07424104 | 1 |
| 44 | Support sub-assy | 01804200 | 1 |
| 45 | Connection Pipe | 05024915 | 1 |
| 46 | Main Board | 30226334 | 1 |
| 47 | Filter Board | 30228115 | 1 |

| | | | |
|---|---|---|---|
| 48 | Capacitor CBB61 | 33010037 | 1 |
| 49 | Temperature Sensor | 3900028004G | 1 |
| 50 | Rear Grill | 01475432 | 1 |
| 51 | Temperature Sensor | 3900028005G | 1 |
| 52 | Radiator | 49010007 | 1 |
| 53 | Terminal Board | 42011242 | 1 |
| 54 | Reactor | 43138004 | 1 |
| 55 | Drainage Plug | 06813401 | 3 |
| 56 | Drainage Connecter | 06123401 | 1 |

GMV-Pd140W/NaB-M ,GMV-Pd160W/NaB-M

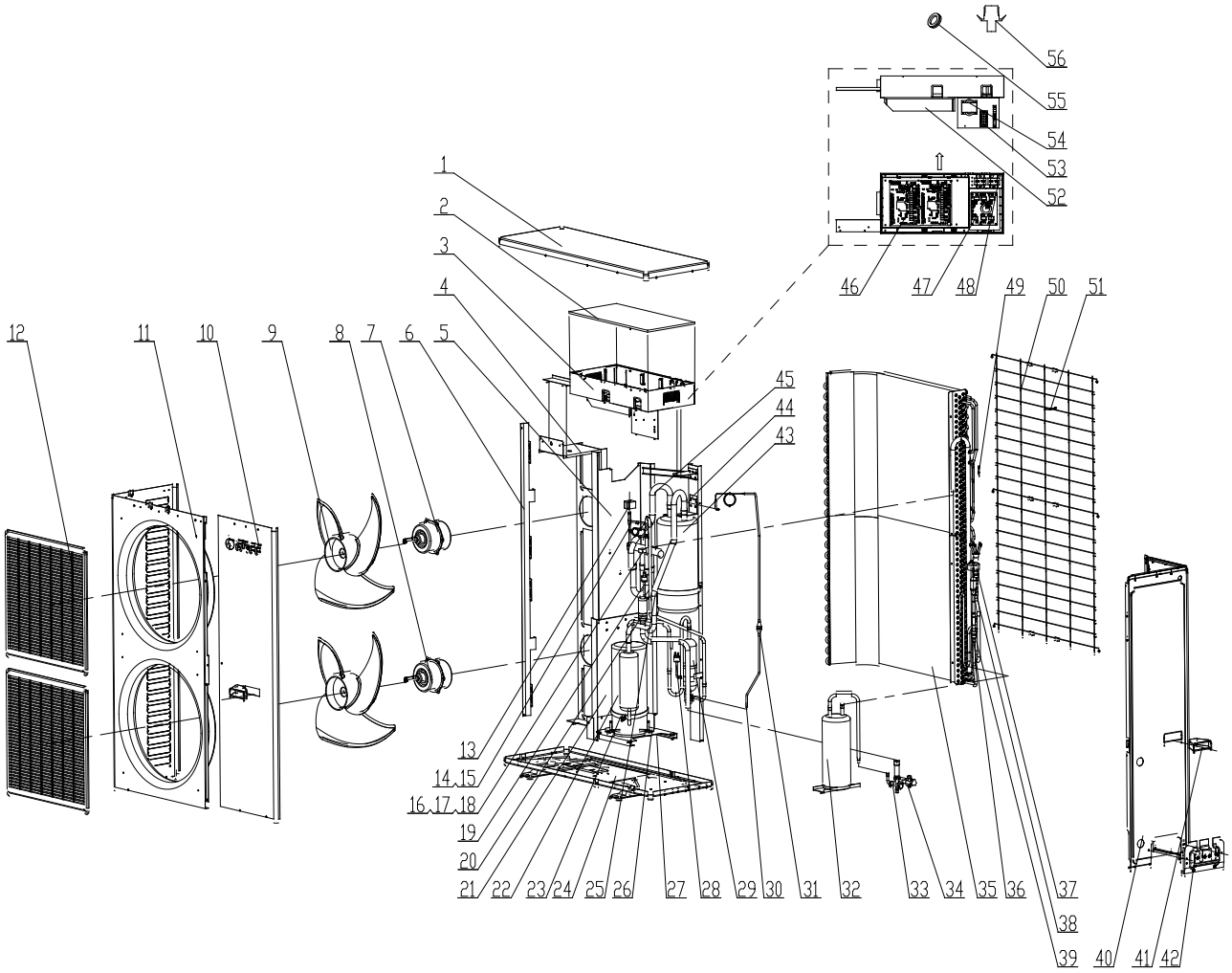


GMV-Pd140W/NaB-M for CN850W0032,GMV-Pd160W/NaB-M for CN850W0140,Part List

| No. | Part Name | Code | Qty. |
|---|---|---|---|
| 1 | Top Cover | 01255013P | 1 |
| 2 | Electric Box Cover | 01424235 | 1 |
| 3 | Electric Box Assy | 01395121 | 1 |
| 4 | Motor Support Sub-Assy | 01804113 | 1 |
| 5 | Clapboard Sub-Assy 2 | 01244136 | 1 |
| 6 | Condenser support sub-assy | 01894119 | 1 |
| 7 | Fan Motor | 15704113 | 1 |

| | | | |
|---|---|---|---|
| 8 | Axial Flow Fan | 10338731 | 2 |
| 9 | Fan Motor | 1570411301 | 1 |
| 10 | Front Side Plate Sub-Assy | 01305430 | 1 |
| 11 | Cabinet | 01435436 | 1 |
| 12 | Front grill | 22414102 | 2 |
| 13 | Magnet Coil | 4304000403 | 1 |
| 14 | Gas by-pass valve sub-assy | 07334329 | 1 |
| 15 | Electromagnetic Valve | 43000054 | 1 |
| 16 | 4-way Valve Sub-Assy | 04144159 | 1 |
| 17 | 4-way Valve | 43000338 | 1 |
| 18 | Magnet Coil | 4300040029 | 1 |
| 19 | Pressure Protect Switch | 46020007 | 1 |
| 20 | Strainer | 07210037 | 1 |
| 21 | Clapboard Sub-Assy 1 | 01244111 | 1 |
| 22 | Compressor and fittings | 00204126 | 1 |
| 23 | electrical heater | 765152123 | 1 |
| 24 | Chassis Sub-assy | 01194133P | 1 |
| 25 | Inhalation Tube Sub-Assy | 04674170 | 1 |
| 26 | Compressor Gasket | 76815204 | 3 |
| 27 | Retaining Plate Sub-Assy | 01844134P | 1 |
| 28 | Pressure Protect Switch | 4602000902 | 1 |
| 29 | Oil Separator | 07228302 | 1 |
| 30 | Capillary Sub-Assy | 04104154 | 1 |
| 31 | StrainerA | 07210022 | 1 |
| 32 | High-pressure Accumulator | 07228739 | 1 |
| 33 | Cut-off Valve | 07130212 | 1 |
| 34 | Cut-off Valve | 07130209 | 1 |
| 35 | Condenser Assy | 01124158 | 1 |
| 36 | Strainer | 07212121 | 2 |
| 37 | Electric expand valve fitting | 4300010810 | 1 |
| 38 | Electronic Expansion Valve | 07334102 | 1 |
| 39 | One way Valve | 04324001 | 1 |
| 40 | Rear Side Plate Sub-Assy | 01314171P | 1 |
| 41 | Handle | 26235253 | 3 |
| 42 | Valve Support Sub-Assy | 01715001 | 1 |
| 43 | Gas-liquid Separator | 07424104 | 1 |
| 44 | Support sub-assy | 01804200 | 1 |
| 45 | Connection Pipe | 05024915 | 1 |
| 46 | Main Board | 30228804 | 1 |
| 47 | Filter Board | 30228118 | 1 |
| 48 | Capacitor CBB61 | 33010037 | 1 |
| 49 | Temperature Sensor | 3900028004 | 1 |
| 50 | Rear Grill | 01475432 | 1 |
| 51 | Temperature Sensor | 3900028005 | 1 |
| 52 | Radiator | 49018028 | 1 |
| 53 | Terminal Board | 42011043 | 1 |
| 54 | Reactor | 43138004 | 1 |
| 55 | Drainage Plug | 06813401 | 3 |
| 56 | Drainage Connecter | 06123401 | 1 |

Add: West Jinji Rd, Qianshan, Zhuhai 519070, Guangdong, China
Tel: (+86-756) 8522218 Fax: (+86-756) 8669426
Email: gree@gree.com.cn
http://www.gree.com

For continuous improvement in the products, Gree reserves the right to modify the product specification and appearance in this manual without notice and without incurring any obligations.

JF00300208